ISTRUZIONI DI POSA

ASSEMBLY INSTRUCTIONS

INSTRUCTIONS DE MONTAGE

MONTAGEANLEITUNG INSTRUCCIONES

PARA LA COLOCACION ASSEMBLY

INSTRUCTIONS

RINGHIERA TIPO "*MINIMAL*" (tipo I): la posizione dei montanti viene definita dal posatore, utilizzando come riferimento l'asse delle colonne riportato sulla dima in carta. Fissare i montanti al pianerottolo di sbarco tramite una base come indicato in fig. 34-A.

Balaustra

RINGHIERA TIPO "*TUBE*": per un corretto montaggio della balaustra (Fig. 23), le colonne dovranno essere collocate ad una distanza sufficiente dallo spigolo della soletta (circa 6 cm), per evitarne la rottura. Distanziarle di circa 10 cm, inserendo all'estremità un "base colonna" e fissarle a terra usando espansori in plastica (Fig. 23-A). Nel caso di sbarco Filo Pavimento, sarà possibile inoltre unire il corrimano con quello del balaustrino utilizzando il raccordo apposito (Fig. 23 e 25-C). Se la balaustra termina contro una parete fissare l'altra estremità del corrimano al muro con un tassello ad espansione (Fig. 23 e 25-E). Per un maggior irrigidimento, collegare la rampa della scala alla balaustra tramite l'elemento indicato in (Fig. 23-B); posizionare l'elemento di irrigidimento della balaustra (Fig. 23-C) e fissare l'ultima colonna a parete (Fig. 23-D). Nel caso di sbarco Sotto Soletta, il corrimano fra balaustrino e balaustra non può essere collegato (Fig. 24).

RINGHIERA TIPO "*MINIMAL*" (tipo I): (Fig. 34) i montanti si fissano a terra tramite una base con dadi ciechi, barre e tasselli (Fig. 34-B). Nei casi in cui è presente, assemblare la staffa di irrigidimento come indicato in Fig. 35 (Fig. 36 per ringhiera tipo LEAF). Ne è consigliato l'utilizzo sul primo montante e poi circa ogni tre montanti nei tratti liberi di balaustra. In caso di balaustra montata a lato soletta fare riferimento a quanto riportato in fig. 37.

ASSEMBLING INSTRUCTIONS

WARNING!! Before proceeding with assembly, please check that the actual dimensions correspond precisely to the project (Fig. 1). Make sure you have all the necessary tools. Remove all the staircase components from the packing and set them out in a space where they are clearly visible.

Preliminary Operations

Assemble the central column using the threaded connector elements (Fig. 2). For the right positioning of the column use the landing step as a reference for centring the staircase in the hole (Fig. 3). Mark the holes on the floor for the fixing plate, drill with a Ø 12 mm bit and anchor the column to the floor (Fig. 2-A). After having completed the fixing to the floor, insert the supplied cover plate (Fig. 4).

Steps Punching for railing

RAILING TYPE "*TUBE*" WITH BALUSTERS : Before starting the assembling of the stair, position the "pawls" elements on the steps properly. Set the supplied cardboard template on the underside of the tread and punch the centre of the pawls. When you have marked all the steps, fix the plastic elements with the correct nuts and bolts. After vaving adjusted the railing, for a greater final stability, fix a second screw, using one of the two impressions on the pawl (Fig. 5).
Note: in case of railing with cables punch only for the required balusters (see fig. 27 and 28).
RAILING TYPE "*MINIMAL*" (type I): use the same template to punch the 3 holes, on the lower side of the tread, for fixing the steel upright (Fig. 31).
Note: for the assembling of the railing type Leaf and Multiblade, refer to what reported for the railing type I (Minimal) because the fixings and the assembling method are the same.

Assembly

Insert into the pole the steps, the wooden or metal spacers (depending on staircase type) and the special plastic spacer discs (Fig .6) which are used to obtain the necessary riser. Temporarily set the steps in a way to uniform load

distribution. The exact number of spacer discs to use depends on the type of spacer (wood or metal) and on the staircase riser. When the spacer is in wood, only the type A spacer disc is used; whereas when the spacer is in metal two type B spacer discs are used over and above spacer disc type A (Fig. 6 and 7).
The tables in Fig. 8 and 9 report the total number of spacers type A according to the total height and the number of steps.

Light Kit

Cut the adhesive squares in half and attach them in the groove of the wooden spacer (Fig. 10-A). Enter the led holder. Apply the transparent and colored color slot in sequence (Fig. 10-B). Pull the electric wires through the holes in the plastic spacer discs and through the slot hole of the steps and interconnect them (Fig. 10 and 11).

will arrange the lighting system on the wooden or metal stringers, or on the modules that make up the stair WITHOUT PROVIDING FOR ANY ELECTRIC CONNECTION. The Customer must therefore request, at its own expense, the assistance of skilled workers (electricians) to provide, after the installation of the stair, for spotlight wiring and power supply, connection to the electricity grid as well as to prepare the appropriate thermal-magnetic protection.
will provide the spare components with technical manual and, through the technician authorized to assemble the stair, will only arrange the cables in the stringer or modules, without proceeding with the assembly of individual elements.

Landing step and upper post section

After having completed the assembly of the steps, position the landing step. Use the brackets to fix the step to the slab and close them with the special bracket covers: see Fig.12 for landing flush with floor and Fig. 13 for landing below floor (only for stairs **S**). Cover the metal post with the wooden upper post section, if the spacers are made of wood (Fig. 14) or with the metal upper post section, if the spacers are in metal (Fig. 15) and tighten the threaded bar.
Note: The definitive blocking of the steps in the right position, is based on the type of railing or according to the placement of step supports.

Steps Supports Assembly

In the case of a staircase without railing or with type I "MINIMAL" railing the steps must be rigidified with wooden "spindles supports". The steps must be drilled in place with a Ø 10 mm bit. The support for the first step must be countersunk in the lower part for insertion of the cap nut, while the starting step must have a blind hole to house the bush. The same procedure is followed for the intermediate steps, but a through hole must be drilled in the lower step for insertion of the cap nut (Fig. 16).

Railing Assembly

RAILING TYPE "*TUBE*" WITH BALUSTERS
Assemble the "top fixings" at each baluster (Fig. 17-A). Setting out from the landing step, join the baluster to the baluster piece using two "bottom fixings" and a threaded bar (Fig. 17-B). Proceed by positioning all the balusters relative to the nosings (Fig. 18-A), paying special attention that they are kept in a perfectly vertical position. Once they are in place, tighten them at the pawl with the special screw. Mount the intermediate balusters and close the extremities with the plastic "baluster cap" (Fig. 18-B). For the correct height of the balusters refer to the diagrams shown in fig. 26. On the starting step (Fig. 19) fix the most external balusters to the floor, by means of the bells, making a hole using a Ø 8 mm bit (Fig.19-A).
Note: to insert top and bottoms fixings in the balusters use a rubber hammer

RAILING TYPE "TUBE" WITH CABLES:
The railing model with steel wires as a variant to balusters may be assembled in two different conformations: parallel to the slope of the staircase or in a crossed wire pattern (Fig. 27 and 28). At the extremities of each wire there is a brace (Fig. 29-A) and a terminal element (Fig. 29-B). The wires are anchored to the balusters with rings and grains (Fig. 29-C). The crossed pattern model also has a bush at the wire intersections (Fig. 29-D).

For correct assembly of these railings, follow the measurements indicated in the figures, paying particular attention in the parallel wires model, where it is necessary to maintain the centres of the five rings positioned on the baluster. For a correct height of the balusters please refer to the diagrams shown in fig. 27 and 28.

RAILING TYPE "*MINIMAL*" (type I):
Fig. 30 shows the assembling of the newels type Minimal (A), Leaf (B) and Multiblade (C), which indicates only one type of them as there are no differences for the assembling.
Fix the steel upright with the special screws, positioning it correctly in accordance with the markings punched previously (Fig. 31). Lock the handrail on the ground using the special nuts and bolts (Fig. 32 and 32-A). Fix the newel to the handrail through the appropriate top fixing (Fig. 32-B). In case of a railing on the landing side with a single step (triangular platform) see fig. 33-A.

HANDRAIL: Separately assemble a group of handrails (Fig. 25-D) and fix them temporarily to the "top fixings" (Fig. 25-B). Proceed similarly till to complete he handrail and finish the assembly, locking it definitively to the balusters. If it's possible fix the handrail to the wall as in fig. 25-I.
Warning: The handrails of the different sides of the railing must not be connected to each other, *since they* end and start at different heights.
In the DESIGN version the connectors and caps of the handrail will be of the "articulated" type: insert the end of the handrail into the connector (or cap) and secure it with the special glue (Fig. 25-G et 25-H).

Balustrade on the Landing Platform

RAILING TYPE "*TUBE*": use the template supplied in order to punch the landing step (Fig. 20). Assemble the base and use the bar with cap nut to fix the balusters to the step (Fig. 22-A). Fix the handrail to the wooden final post (Fig. 21-A), or insert it in the end cap (Fig. 22), depending on the model of staircase. Close the extremity of the handrail with a cap (Fig. 22-B).

RAILING TYPE "*MINIMAL*" (type I): the position of the newels is defined by the installer, using as reference the centers of the balusters shown on the paper template. Fix the newels to the landing platform by means of a base bottom fixing as shown in fig. 34-A.

Balustrade

RAILING TYPE "*TUBE*": for correct assembly of the balustrade (Fig. 23) the balusters must be positioned at sufficient distance from the edge of the slab (approx. 6 cm) in order to avoid breakage. Space them by approximately 10 cm, inserting a "baluster base" at the extremity and fixing them to the floor with plastic expanders (Fig. 23-A). In the case of Flush with Floor landing step it is moreover possible to join the handrail with the one of the small balustrade, using the special connector (Fig. 23 and 25-C). Fix the other end to the wall with a wall bolt (Fig. 23 and 25-E). For greater rigidity connect the stair flight to the balustrade with the element shown in (Fig. 23-B); position the balustrade stiffeninf element (Fig. 23-C) and fix the last baluster to the wall (Fig. 23-D).In the case of Below Floor landing step, the handrail of the balustrade cannot be connected to the one on the landing platform (Fig. 24).

RAILING TYPE "*MINIMAL*" (type I): (Fig. 34) the newels are fixed to the floor through cap nuts, bars and dowels (Fig. 34-B). In case it is present, assemble the stiffening bracket as shown in Figure 35 (see Fig. 36 for railing type LEAF). It is recommended to use it in the first newel and then about every three newels in the free sections of balustrade.
In case of an opening balustrade fixed on slab edge refer to what described fig. 37.

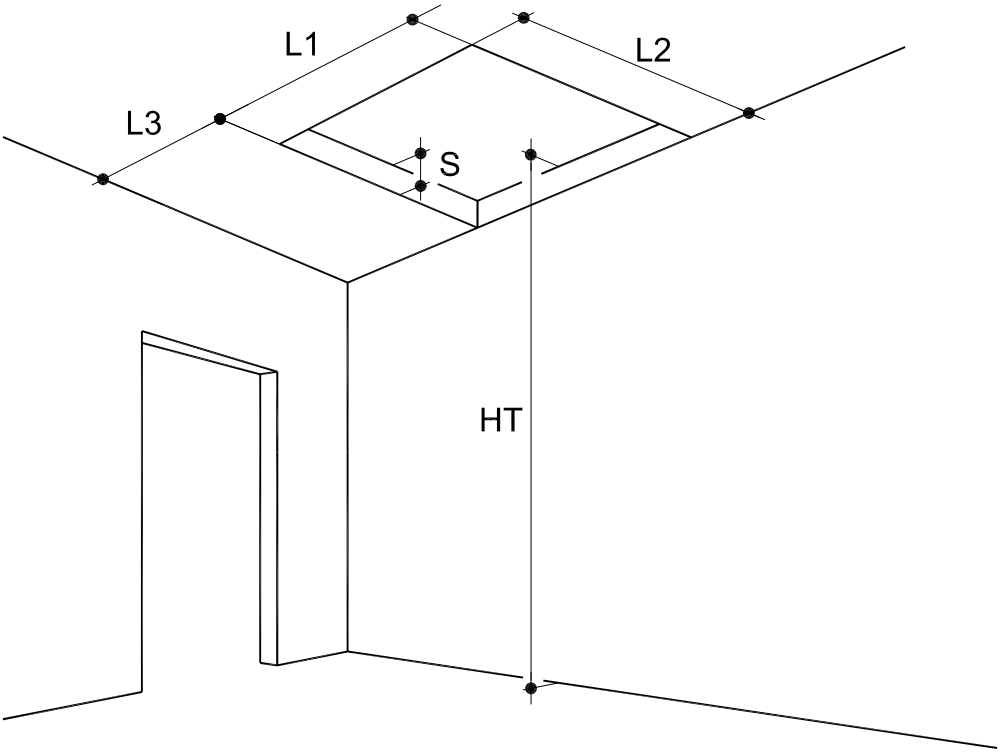
L1
L2
L3
S
HT

1

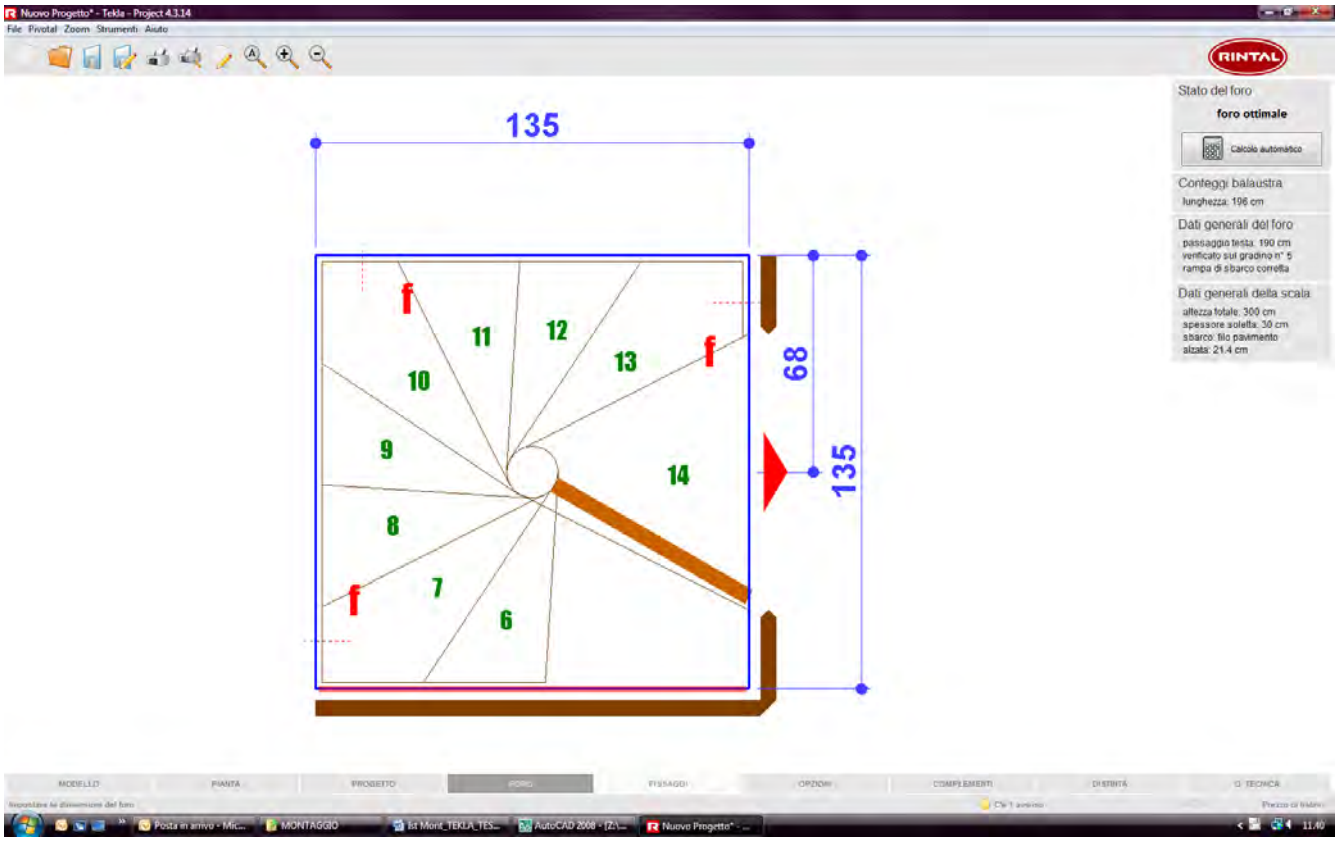
Nuovo Progetto* - Tekla - Project 4.3.14
File Pivotal Zoom Strumenti Aiuto
RINTAL
Stato del foro
foro ottimale
Calcolo automatico
Conteggi balaustra
lunghezza: 196 cm
Dati generali del foro
passaggio testa: 190 cm
verificato sul gradino n° 5
rampa di sbarco corretta
Dati generali della scala
altezza totale: 300 cm
spessore soletta: 30 cm
sbarco: filo pavimento
alzata: 21.4 cm
135
68
135
f
f
f
6
7
8
9
10
11
12
13
14

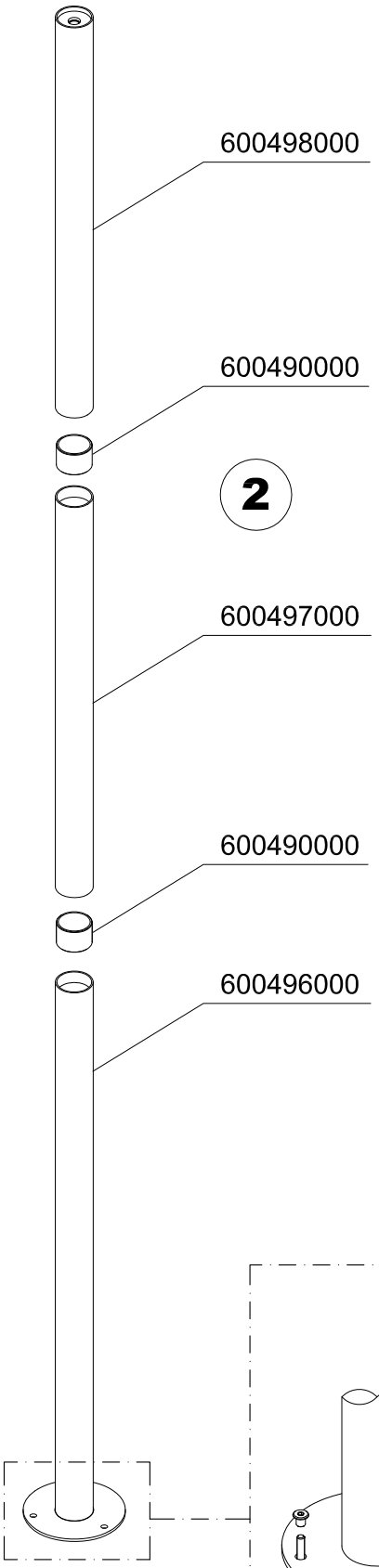

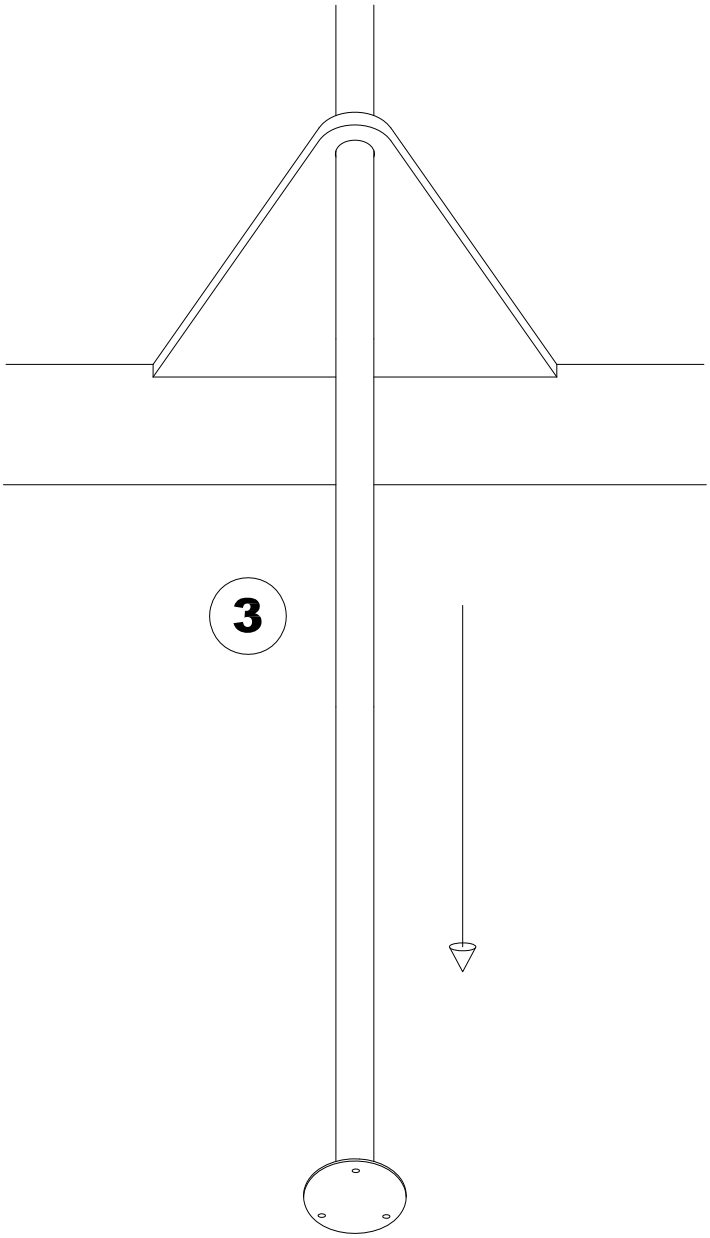

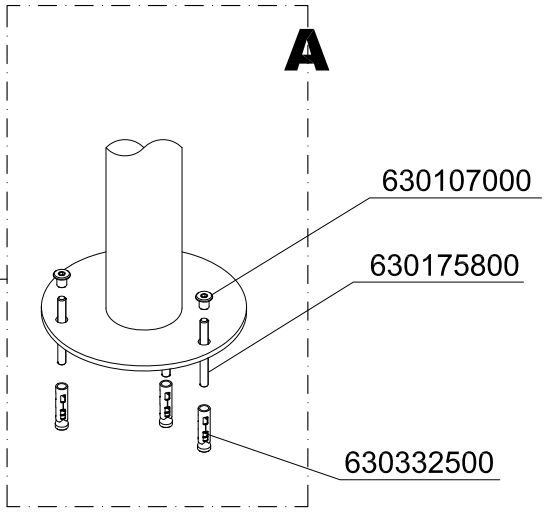

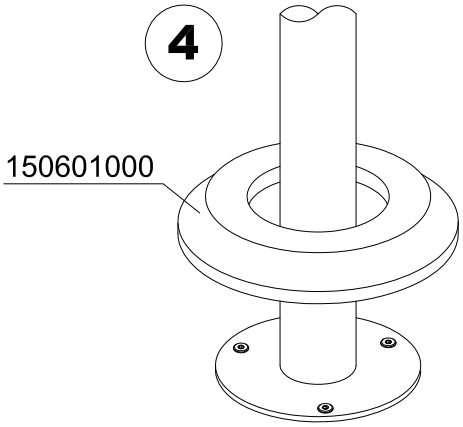

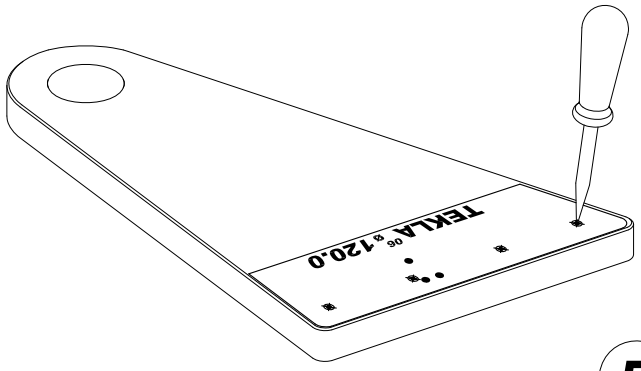

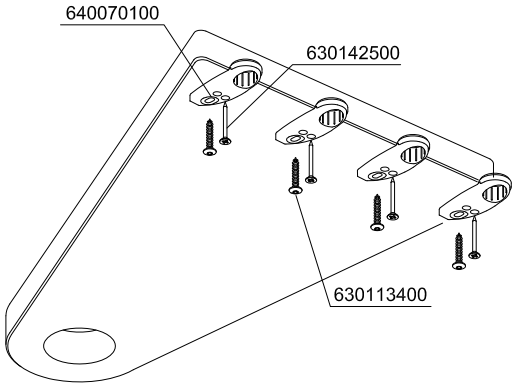

5

Wood structure

Iron structure

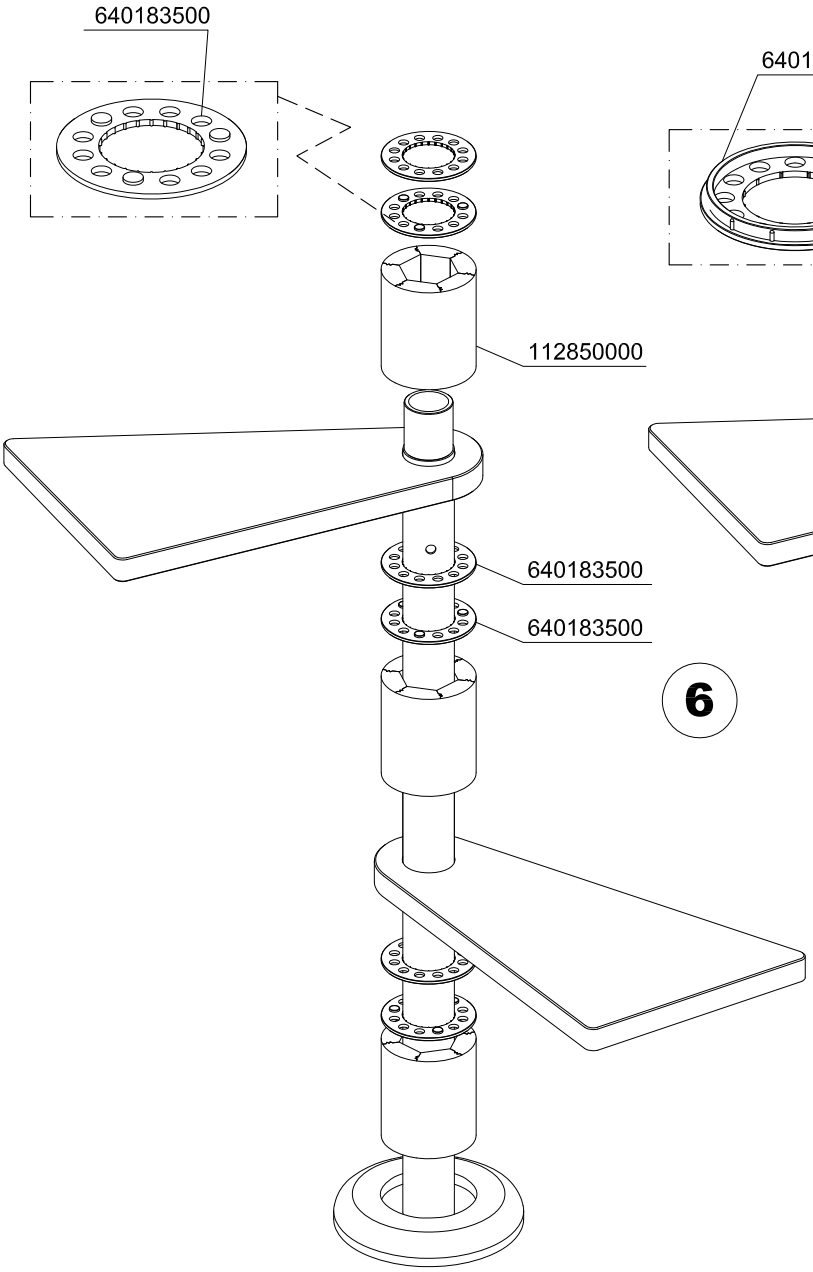

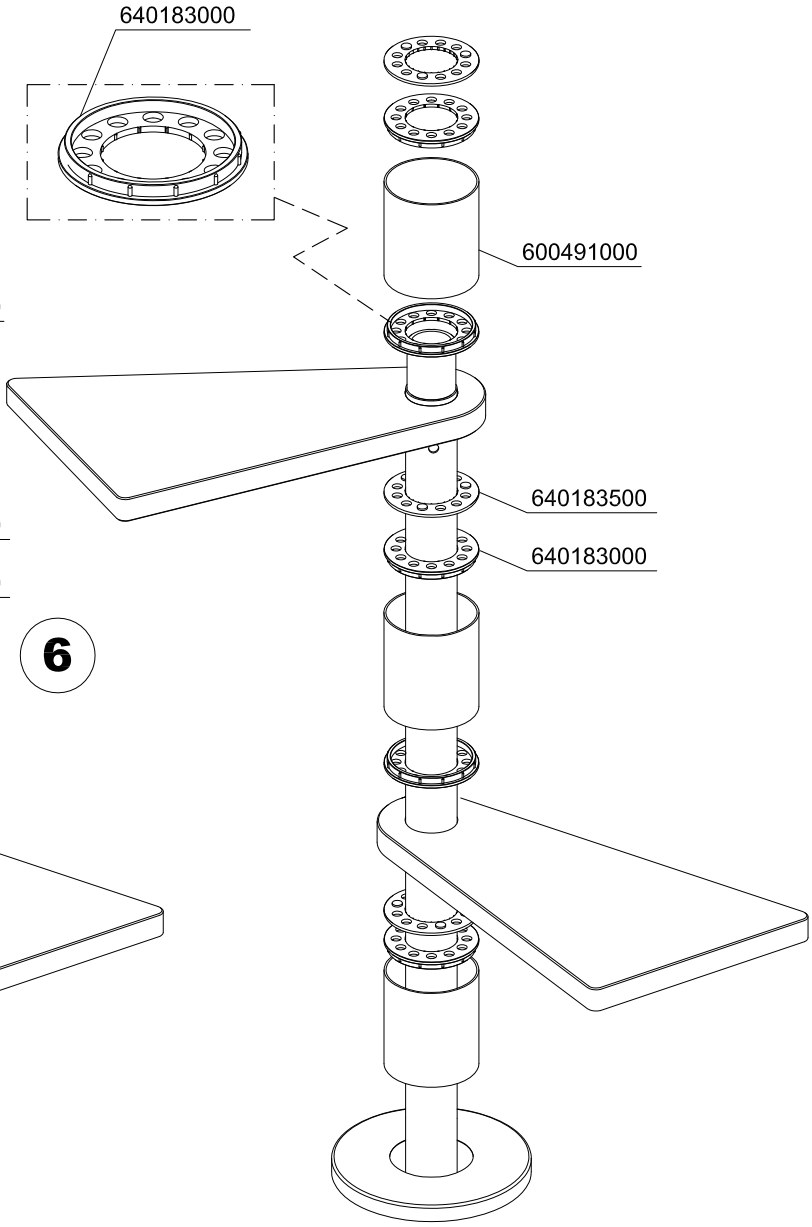

6

WOOD SPACER

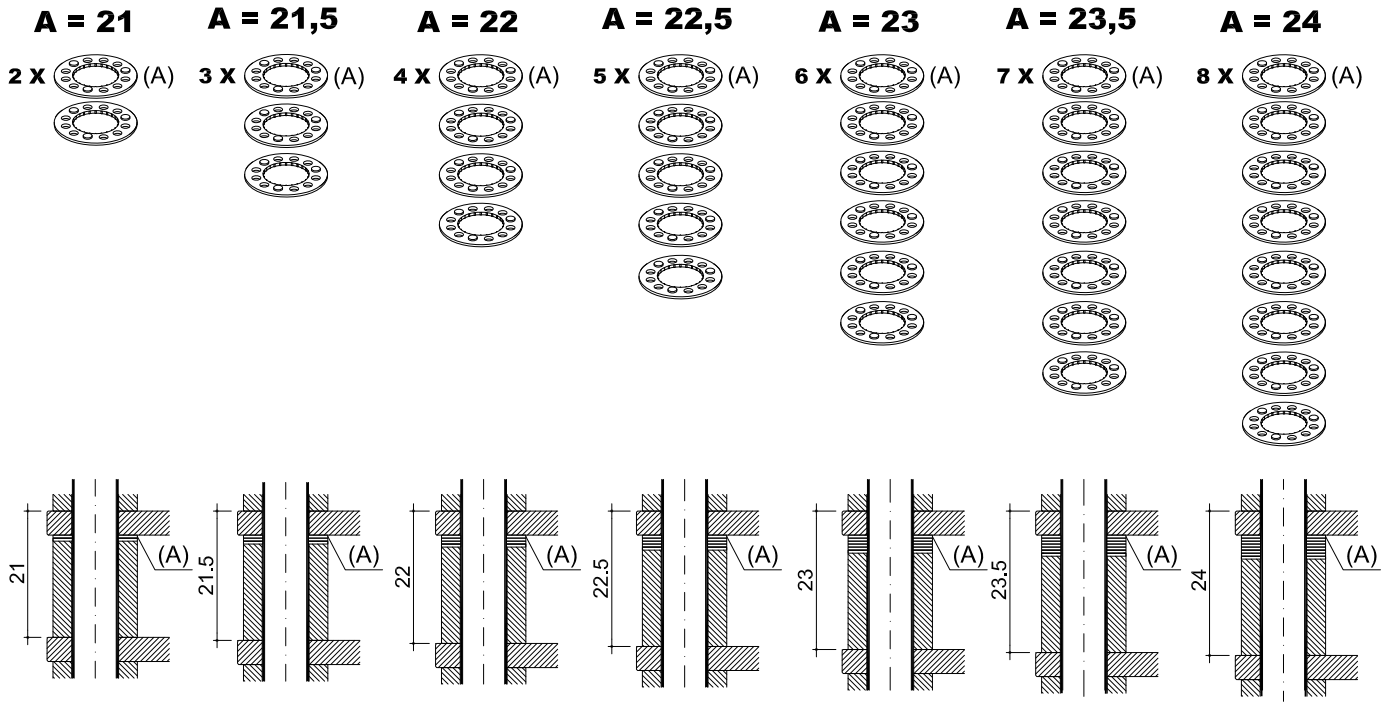

7

IRON SPACER

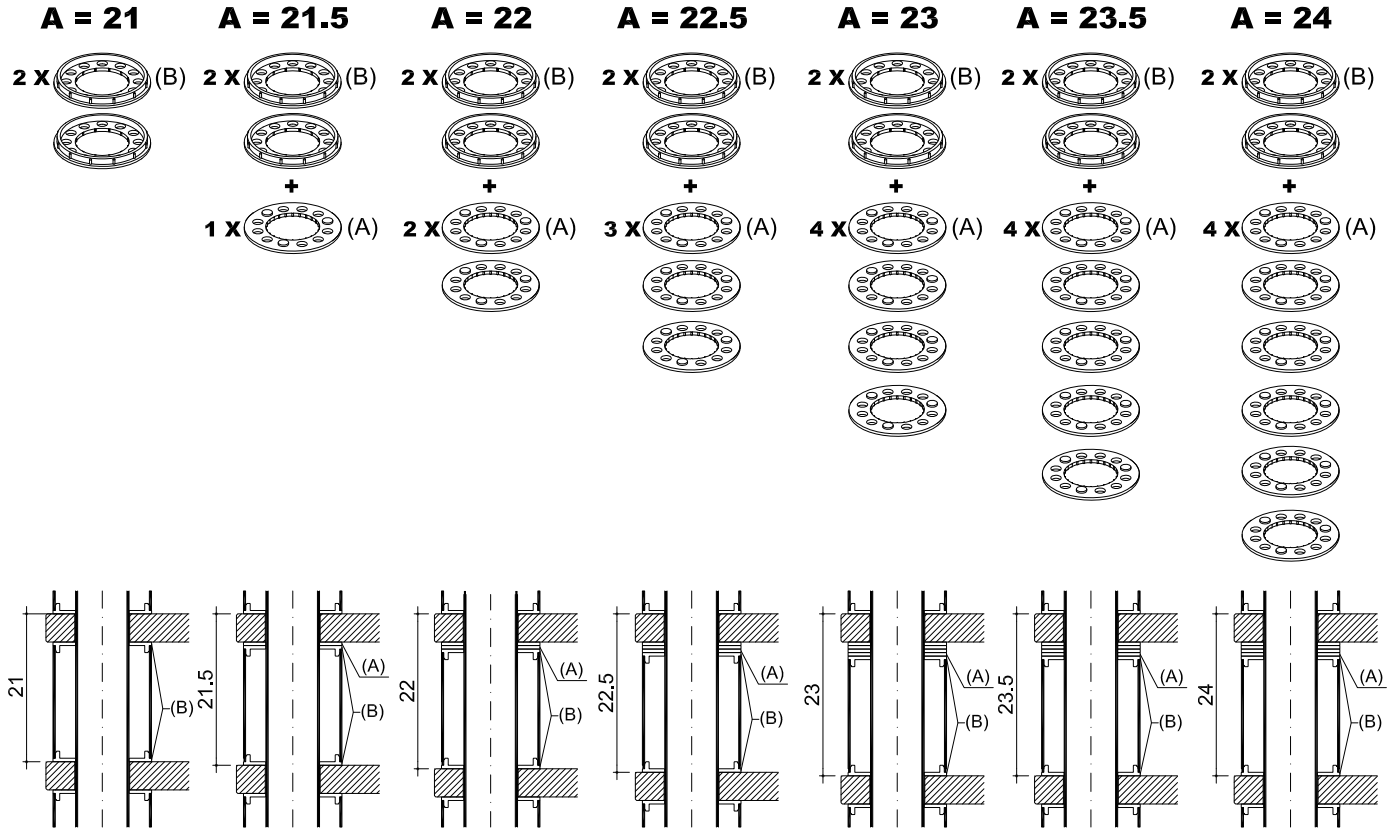

HT	N° Alzate		
	11	12	13
231.0	22		
232.0	24		
233.0	26		
234.0	28		
235.0	30		
236.0	32		
237.0	34		
238.0	36		
239.0	38		
240.0	40		
241.0	42		
242.0	44		
243.0	46		
244.0	48		
245.0	50		
246.0	52		
247.0	54		
248.0	56		
249.0	58		
250.0	60		
251.0	62		
252.0	64	24	
253.0	66	26	
254.0	68	28	
255.0	70	30	
256.0	72	32	
257.0	74	34	
258.0	76	36	
259.0	78	38	
260.0	80	40	
261.0	82	42	
262.0	84	44	
263.0	86	46	
264.0		48	
265.0		50	
266.0		52	
267.0		54	
268.0		56	
269.0		58	
270.0		60	
271.0		62	
272.0		64	
273.0		66	26
274.0		68	28
275.0		70	30
276.0		72	32
277.0		74	34
278.0		76	36
279.0		78	38
280.0		80	40
281.0		82	42
282.0		84	44
283.0		86	46
284.0		88	48
285.0		90	50
286.0		92	52
287.0		94	54
288.0		96	56
289.0			58
290.0			60
291.0			62
292.0			64
293.0			66

HT	N° Alzate			
	13	14	15	16
294.0	68	28		
295.0	70	30		
296.0	72	32		
297.0	74	34		
298.0	76	36		
299.0	78	38		
300.0	80	40		
301.0	82	42		
302.0	84	44		
303.0	86	46		
304.0	88	48		
305.0	90	50		
306.0	92	52		
307.0	94	54		
308.0	96	56		
309.0	98	58		
310.0	100	60		
311.0	102	62		
312.0	104	64		
313.0		66		
314.0		68		
315.0		70	30	
316.0		72	32	
317.0		74	34	
318.0		76	36	
319.0		78	38	
320.0		80	40	
321.0		82	42	
322.0		84	44	
323.0		86	46	
324.0		88	48	
325.0		90	50	
326.0		92	52	
327.0		94	54	
328.0		96	56	
329.0		98	58	
330.0		100	60	
331.0		102	62	
332.0		104	64	
333.0		106	66	
334.0		108	68	
335.0		110	70	
336.0		112	72	32
337.0			74	34
338.0			76	36
339.0			78	38
340.0			80	40
341.0			82	42
342.0			84	44
343.0			86	46
344.0			88	48
345.0			90	50
346.0			92	52
347.0			94	54
348.0			96	56
349.0			98	58
350.0			100	60
351.0			102	62
352.0			104	64
353.0			106	66
354.0			108	68
355.0			110	70
356.0			112	72

HT	N° Alzate	
	15	16
357.0	114	74
358.0	116	76
359.0	118	78
360.0	120	80
361.0		82
362.0		84
363.0		86
364.0		88
365.0		90
366.0		92
367.0		94
368.0		96
369.0		98
370.0		100
371.0		102
372.0		104
373.0		106
374.0		108
375.0		110
376.0		112
377.0		114
378.0		116
379.0		118
380.0		120
381.0		122
382.0		124
383.0		126
384.0		128

8

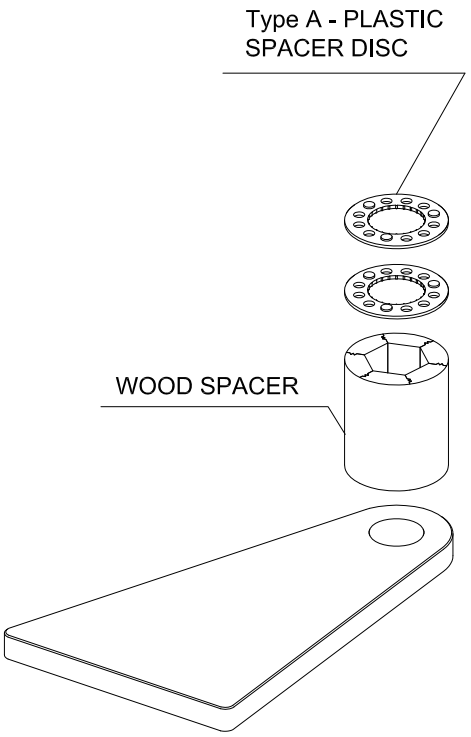

HT	N° Alzate		
	11	12	13
232.0	2		
233.0	4		
234.0	6		
235.0	8		
236.0	10		
237.0	12		
238.0	14		
239.0	16		
240.0	18		
241.0	20		
242.0	22		
243.0	24		
244.0	26		
245.0	28		
246.0	30		
247.0	32		
248.0	34		
249.0	36		
250.0	38		
251.0	40		
252.0	42	2	
253.0	44	4	
254.0	46	6	
255.0	48	8	
256.0	50	10	
257.0	52	12	
258.0	54	14	
259.0	56	16	
260.0	58	18	
261.0	60	20	
262.0	62	22	
263.0	64	24	
264.0		26	
265.0		28	
266.0		30	
267.0		32	
268.0		34	
269.0		36	
270.0		38	
271.0		40	
272.0		42	
273.0		44	
274.0		46	2
275.0		48	4
276.0		50	6
277.0		52	8
278.0		54	10
279.0		56	12
280.0		58	14
281.0		60	16
282.0		62	18
283.0		64	20
284.0		66	22
285.0		68	24
286.0		70	26
287.0		72	28
288.0		74	30
289.0			32
290.0			34
291.0			36
292.0			38
293.0			40

HT	N° Alzate			
	13	14	15	16
294.0	42			
295.0	44	2		
296.0	46	4		
297.0	48	6		
298.0	50	8		
299.0	52	10		
300.0	54	12		
301.0	56	14		
302.0	58	16		
303.0	60	18		
304.0	62	20		
305.0	64	22		
306.0	66	24		
307.0	68	26		
308.0	70	28		
309.0	72	30		
310.0	74	32		
311.0	76	34		
312.0	78	36		
313.0		38		
314.0		40		
315.0		42		
316.0		44	2	
317.0		46	4	
318.0		48	6	
319.0		50	8	
320.0		52	10	
321.0		54	12	
322.0		56	14	
323.0		58	16	
324.0		60	18	
325.0		62	20	
326.0		64	22	
327.0		66	24	
328.0		68	26	
329.0		70	28	
330.0		72	30	
331.0		74	32	
332.0		76	34	
333.0		78	36	
334.0		80	38	
335.0		82	40	
336.0		84	42	
337.0			44	2
338.0			46	4
339.0			48	6
340.0			50	8
341.0			52	10
342.0			54	12
343.0			56	14
344.0			58	16
345.0			60	18
346.0			62	20
347.0			64	22
348.0			66	24
349.0			68	26
350.0			70	28
351.0			72	30
352.0			74	32
353.0			76	34
354.0			78	36
355.0			80	38
356.0			82	40

HT	N° Alzate	
	15	16
357.0	84	42
358.0	86	44
359.0	88	46
360.0	90	48
361.0		50
362.0		52
363.0		54
364.0		56
365.0		58
366.0		60
367.0		62
368.0		64
369.0		66
370.0		68
371.0		70
372.0		72
373.0		74
374.0		76
375.0		78
376.0		80
377.0		82
378.0		84
379.0		86
380.0		88
381.0		90
382.0		92
383.0		94
384.0		96

9

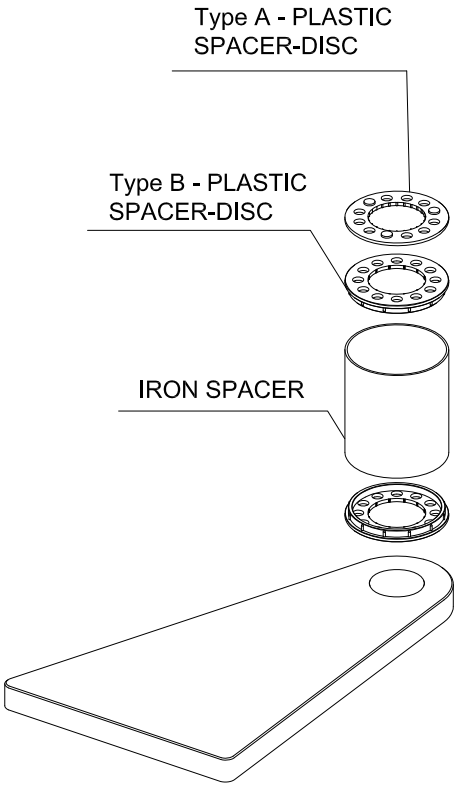

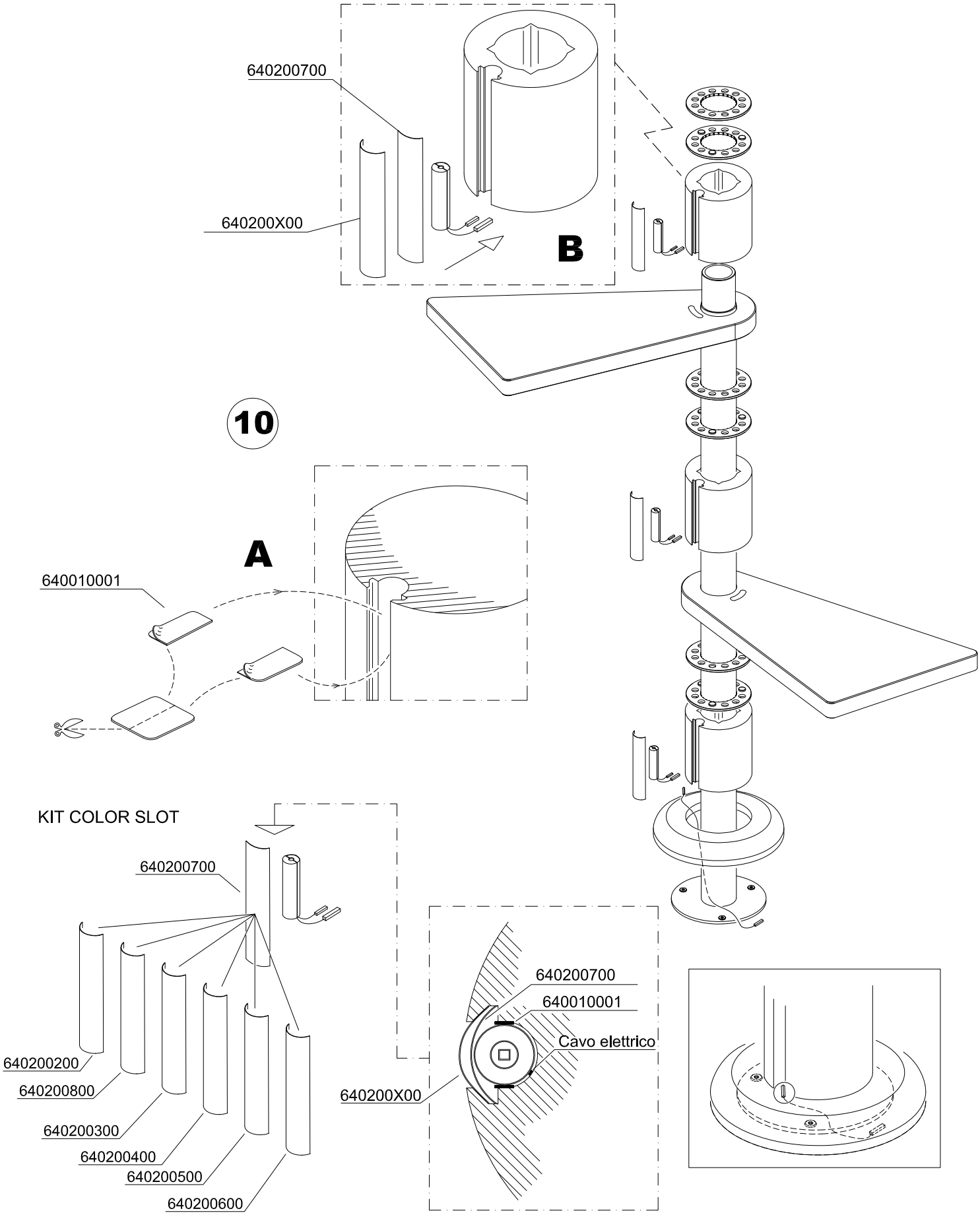

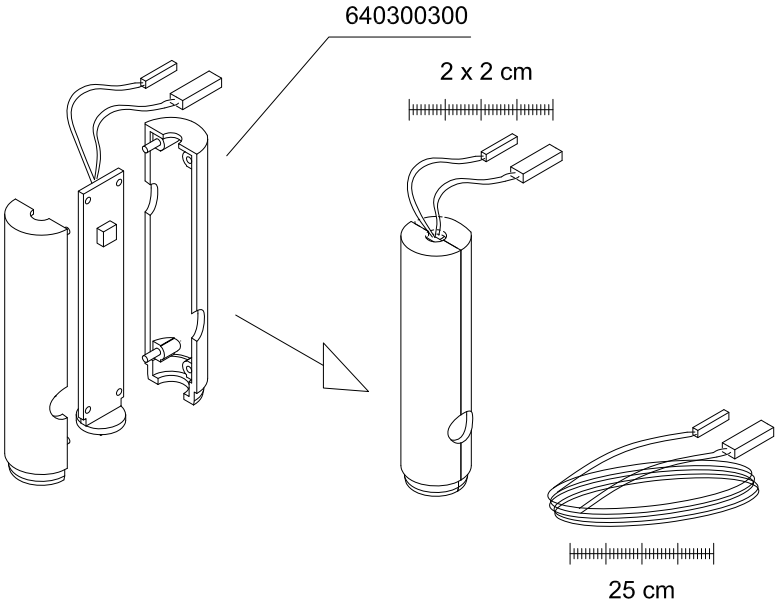

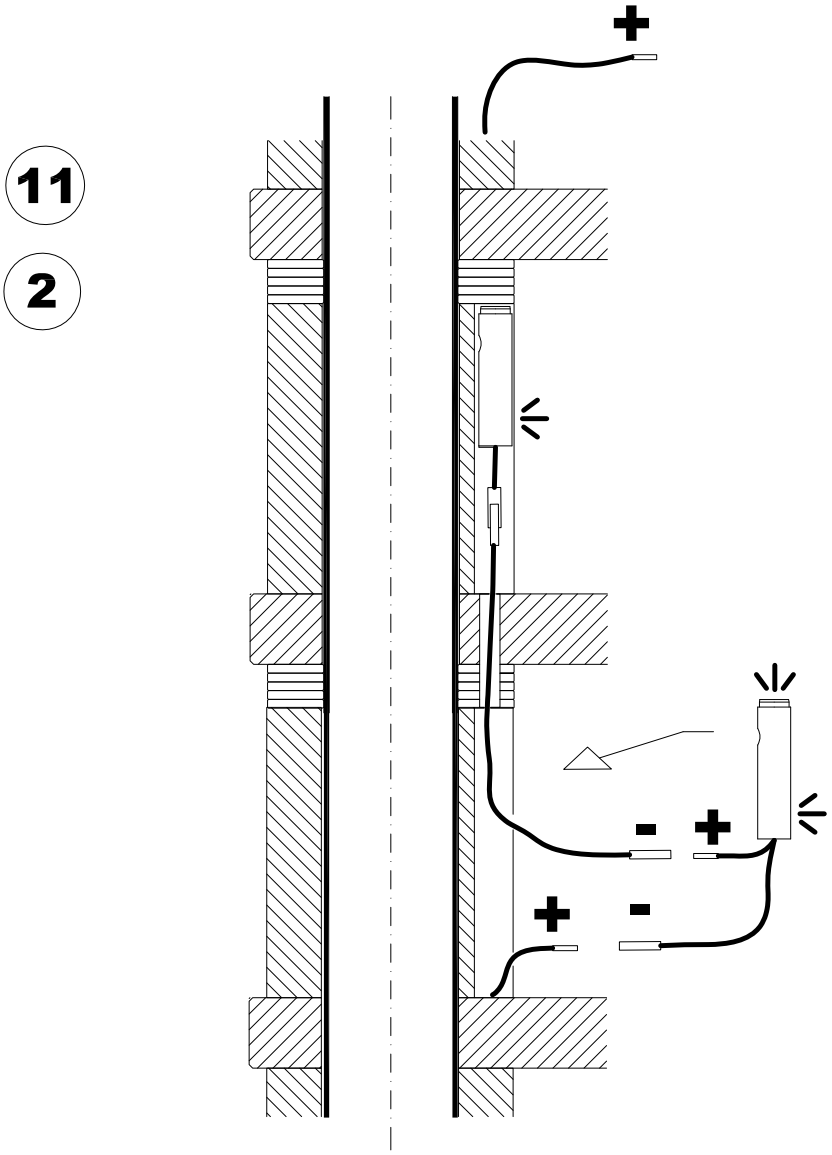

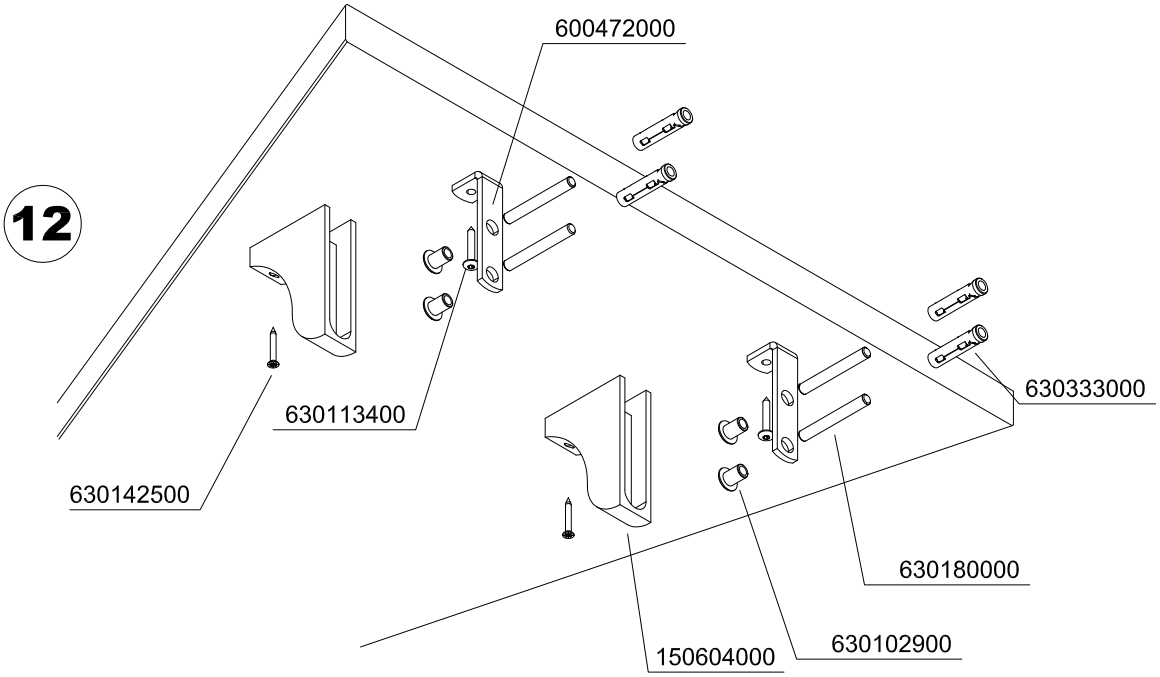

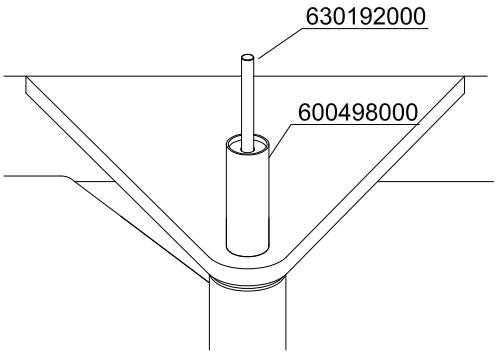

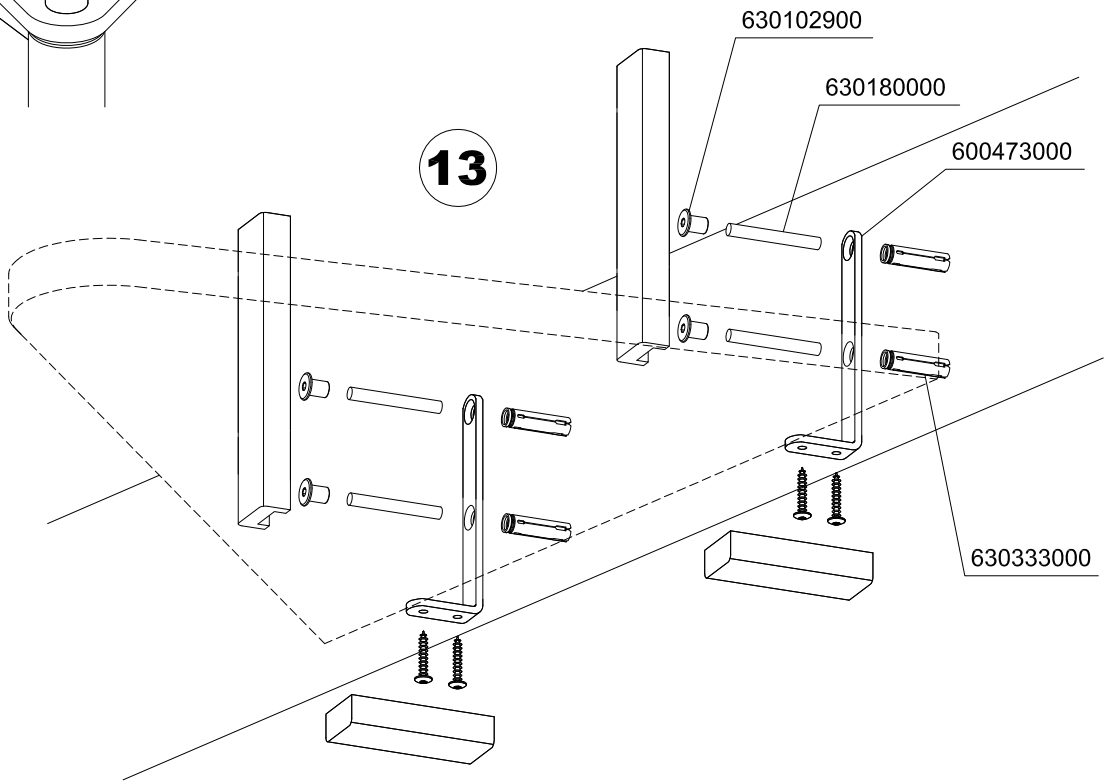

Wood structure

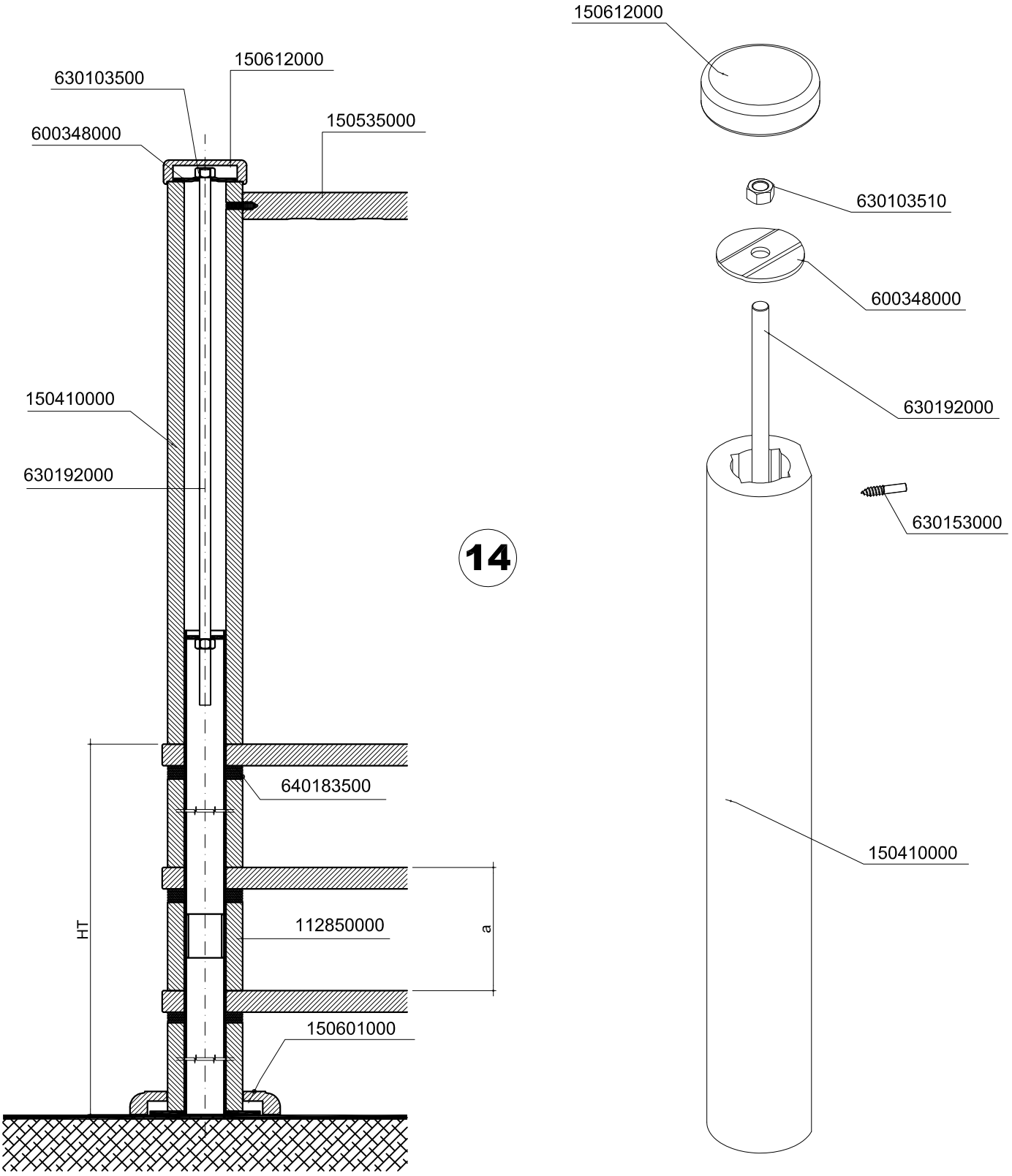

Iron structure

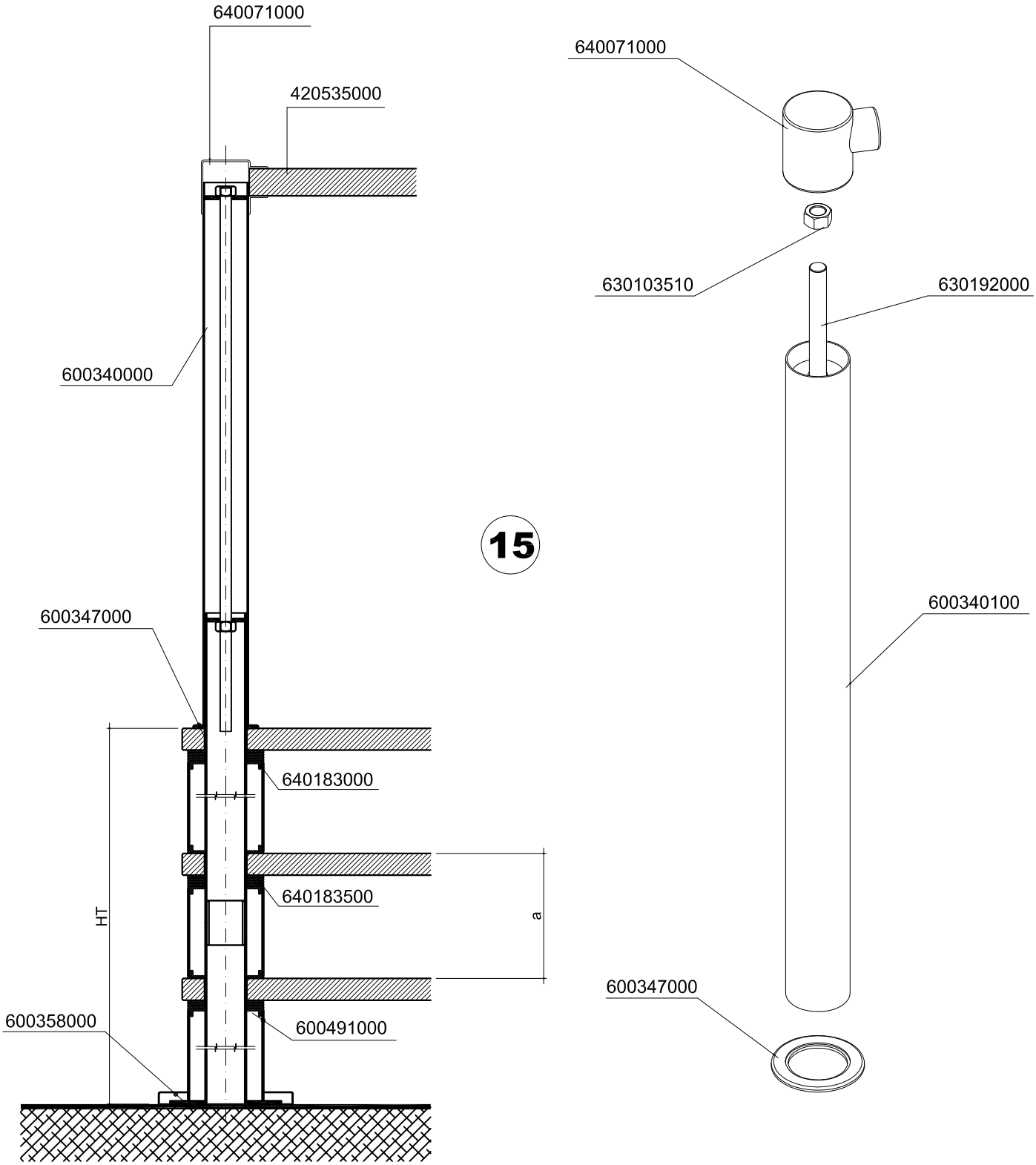

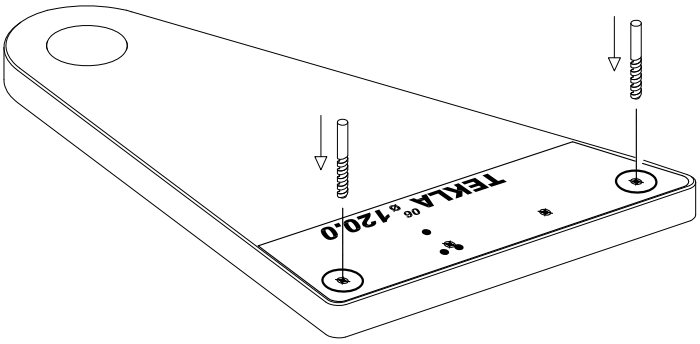

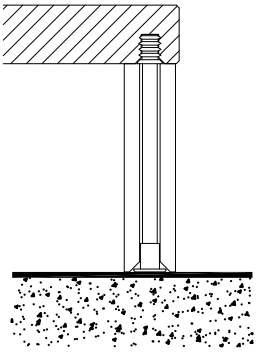

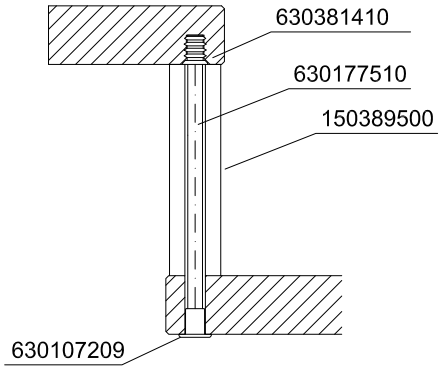

16

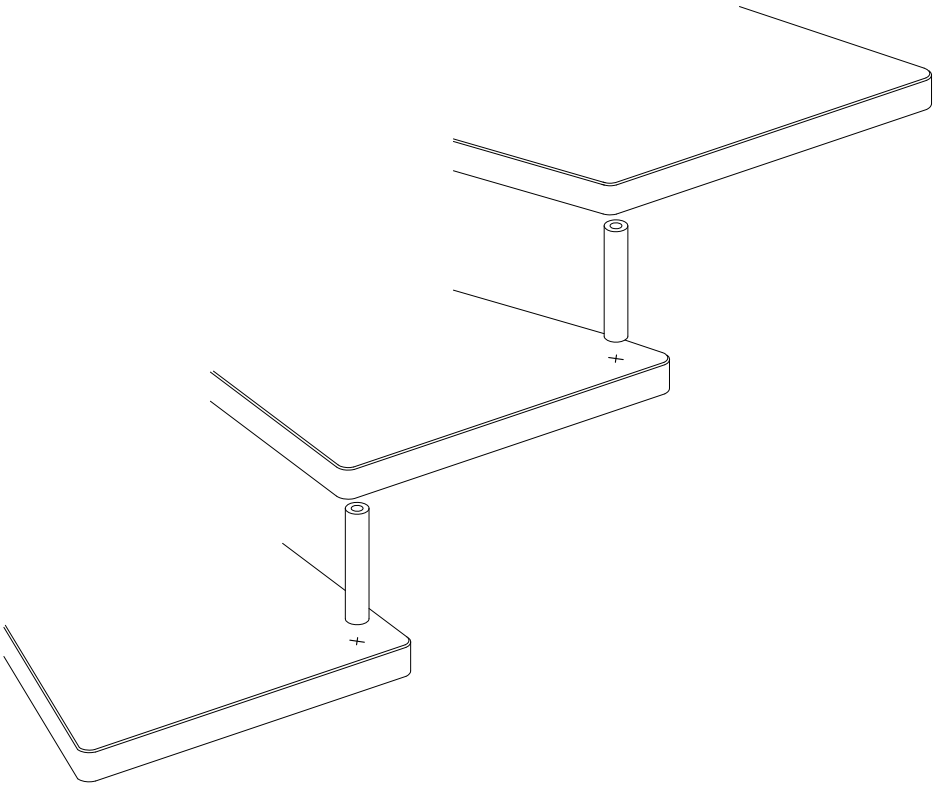

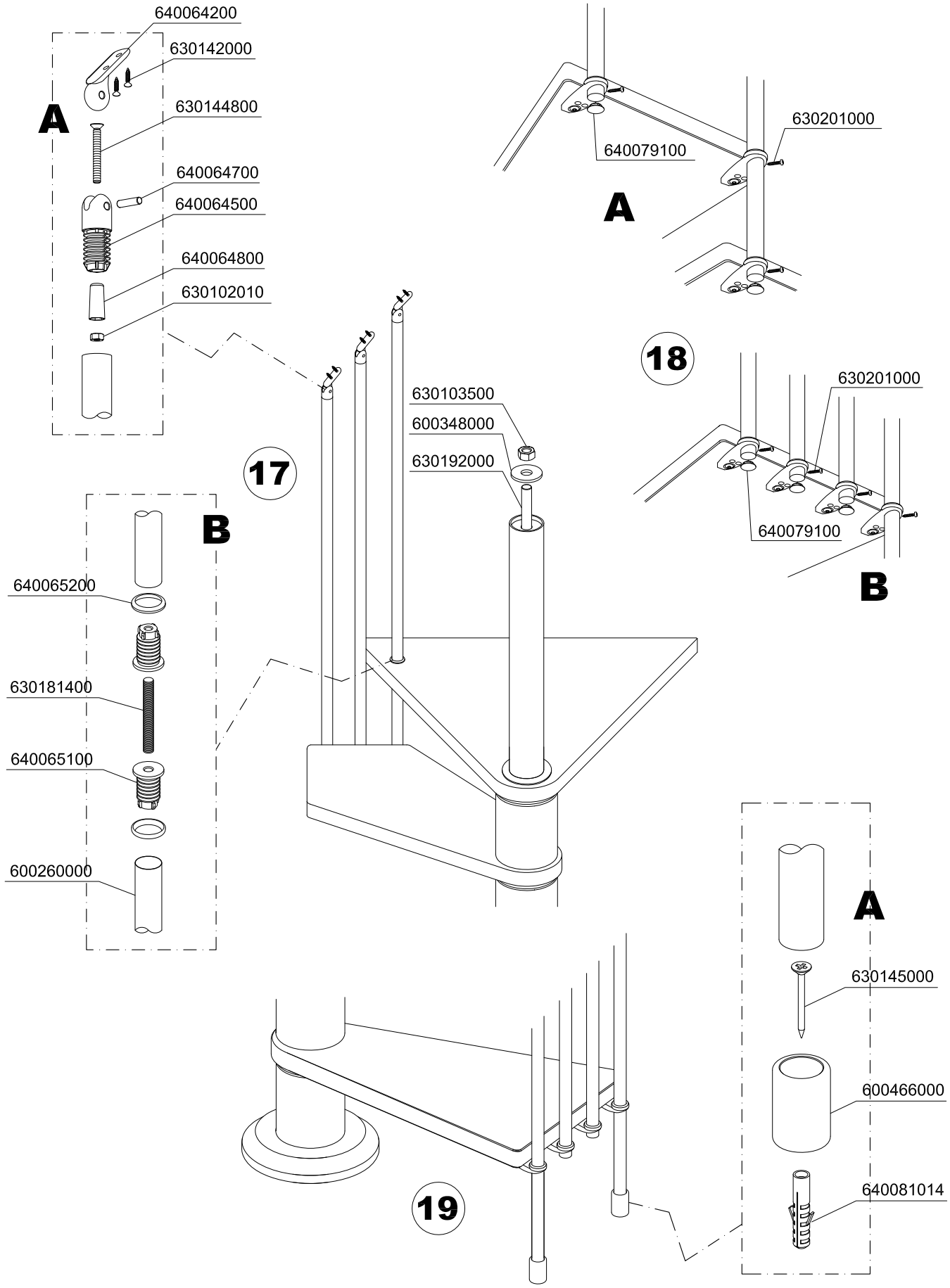
640064200
630142000
A
630144800
640064700
640064500
640064800
630102010
17
630103500
600348000
630192000
B
640065200
630181400
640065100
600260000
640079100
630201000
A
18
630201000
640079100
B
A
630145000
600466000
640081014
19

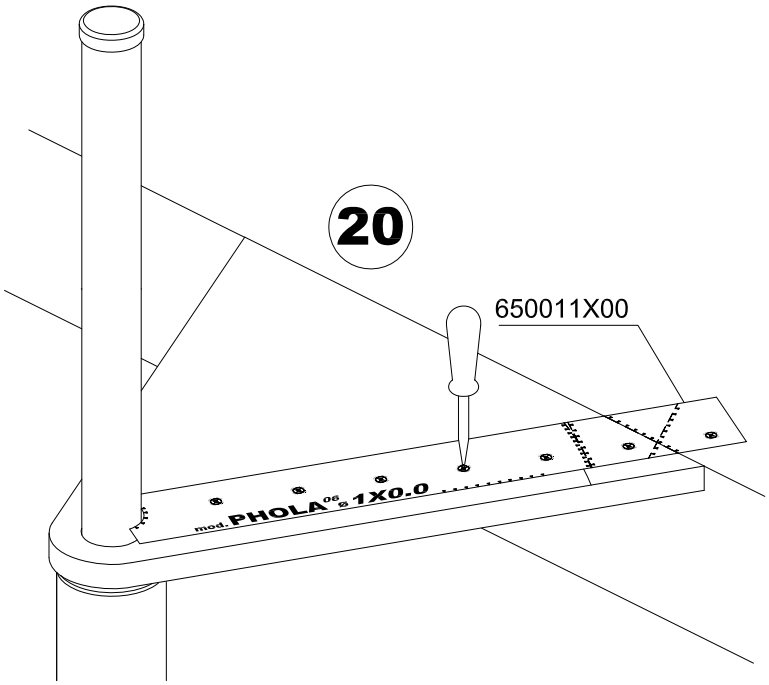
20
650011X00
mod. PHOLA 06 ø 1X0.0

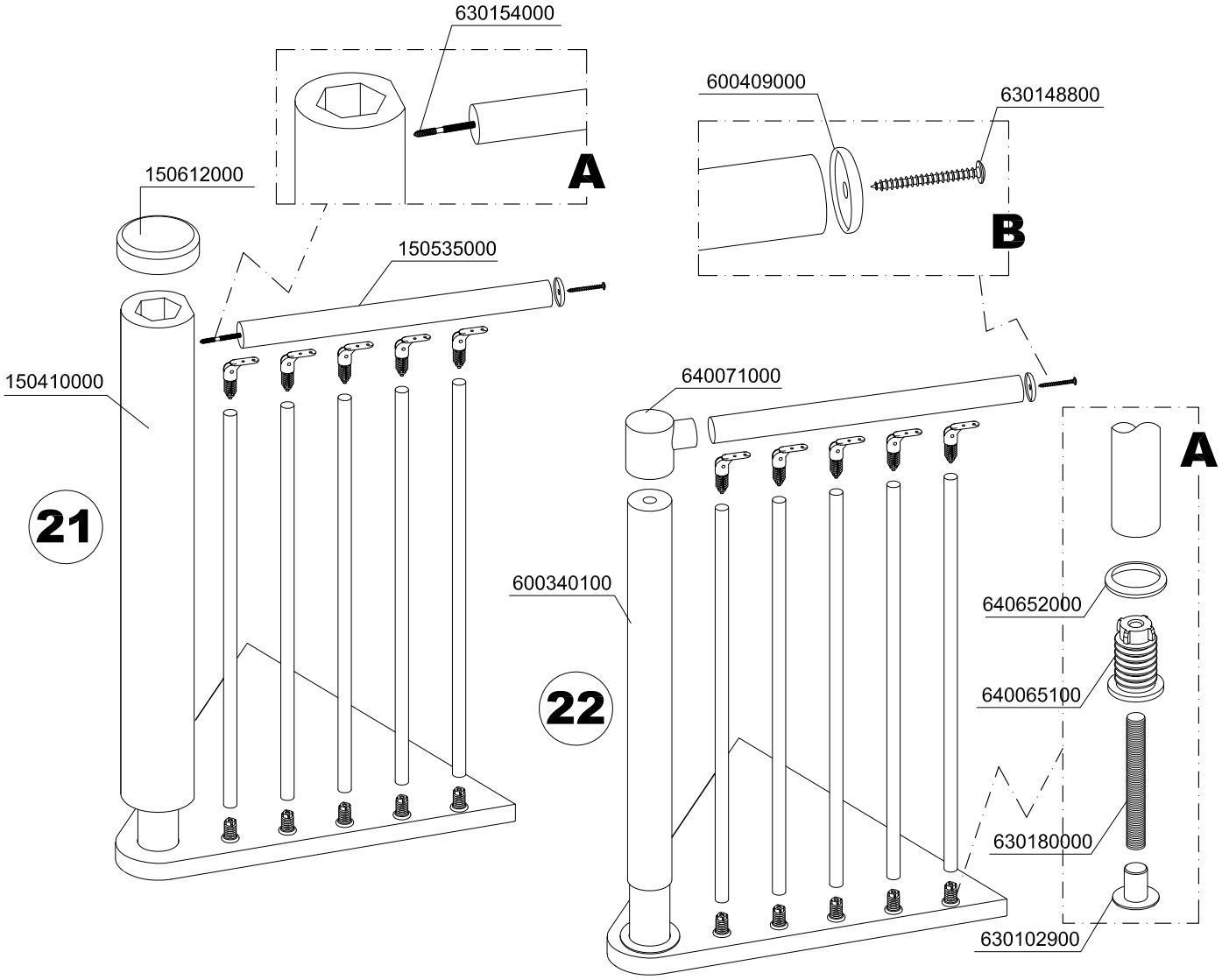
630154000
A
600409000
630148800
B
150612000
150535000
150410000
21
640071000
A
600340100
640652000
640065100
22
630180000
630102900

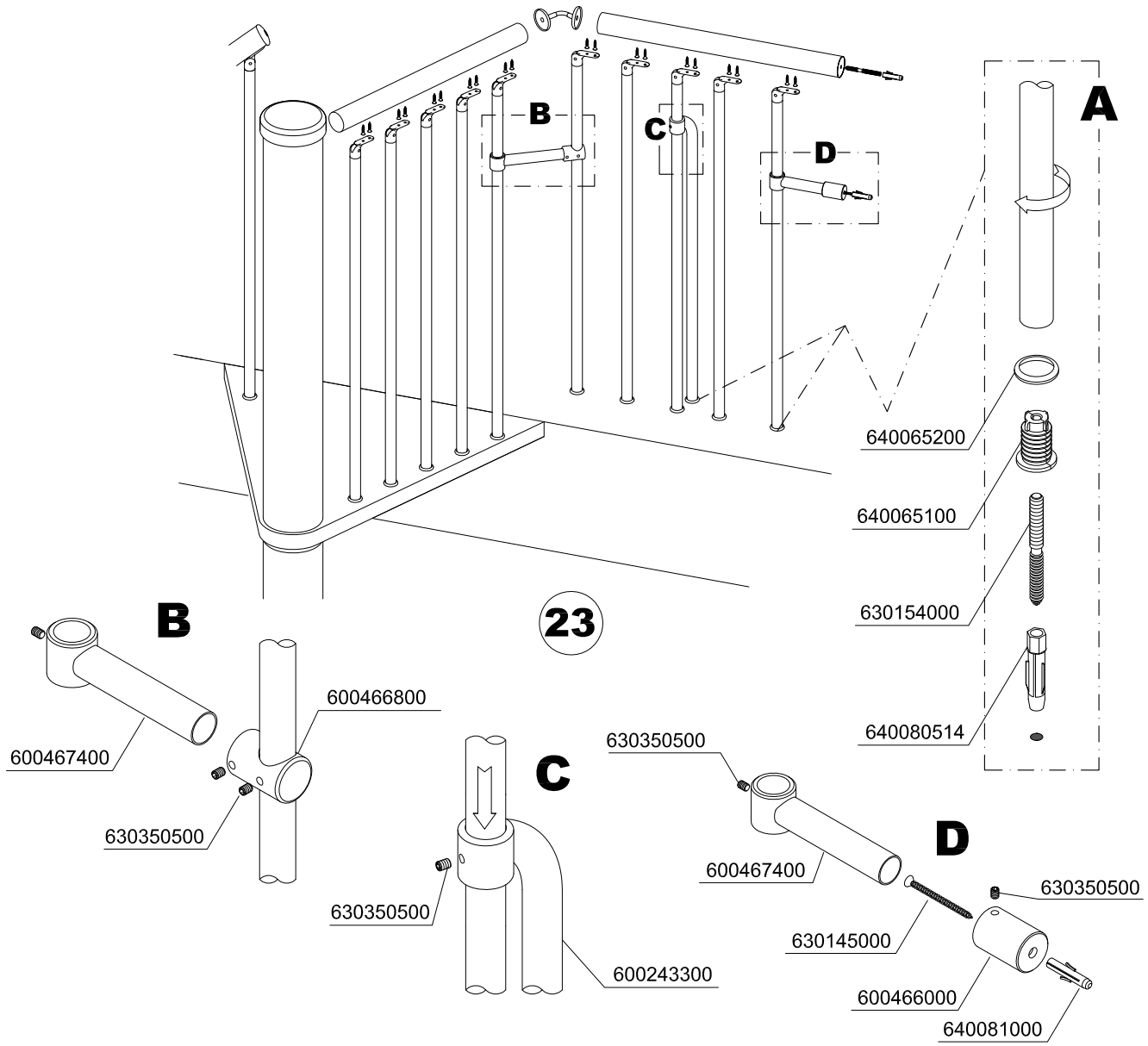

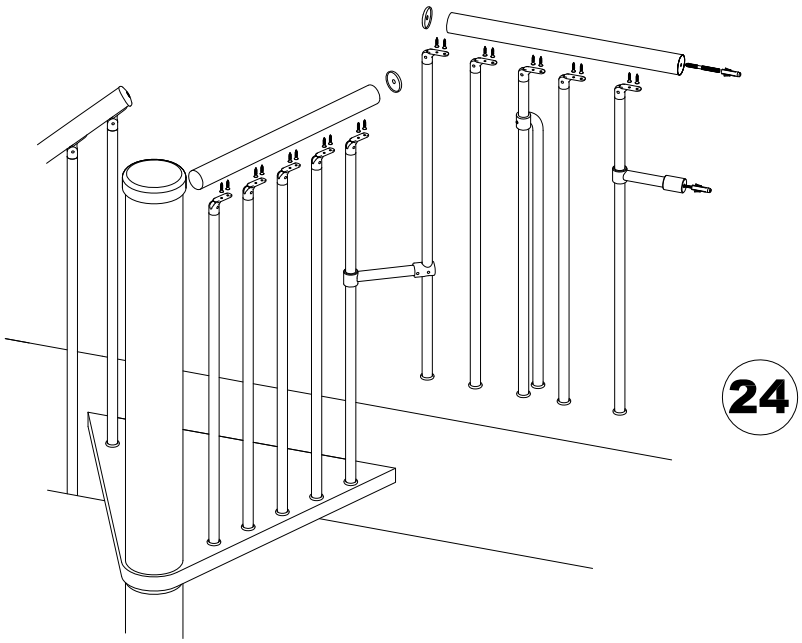

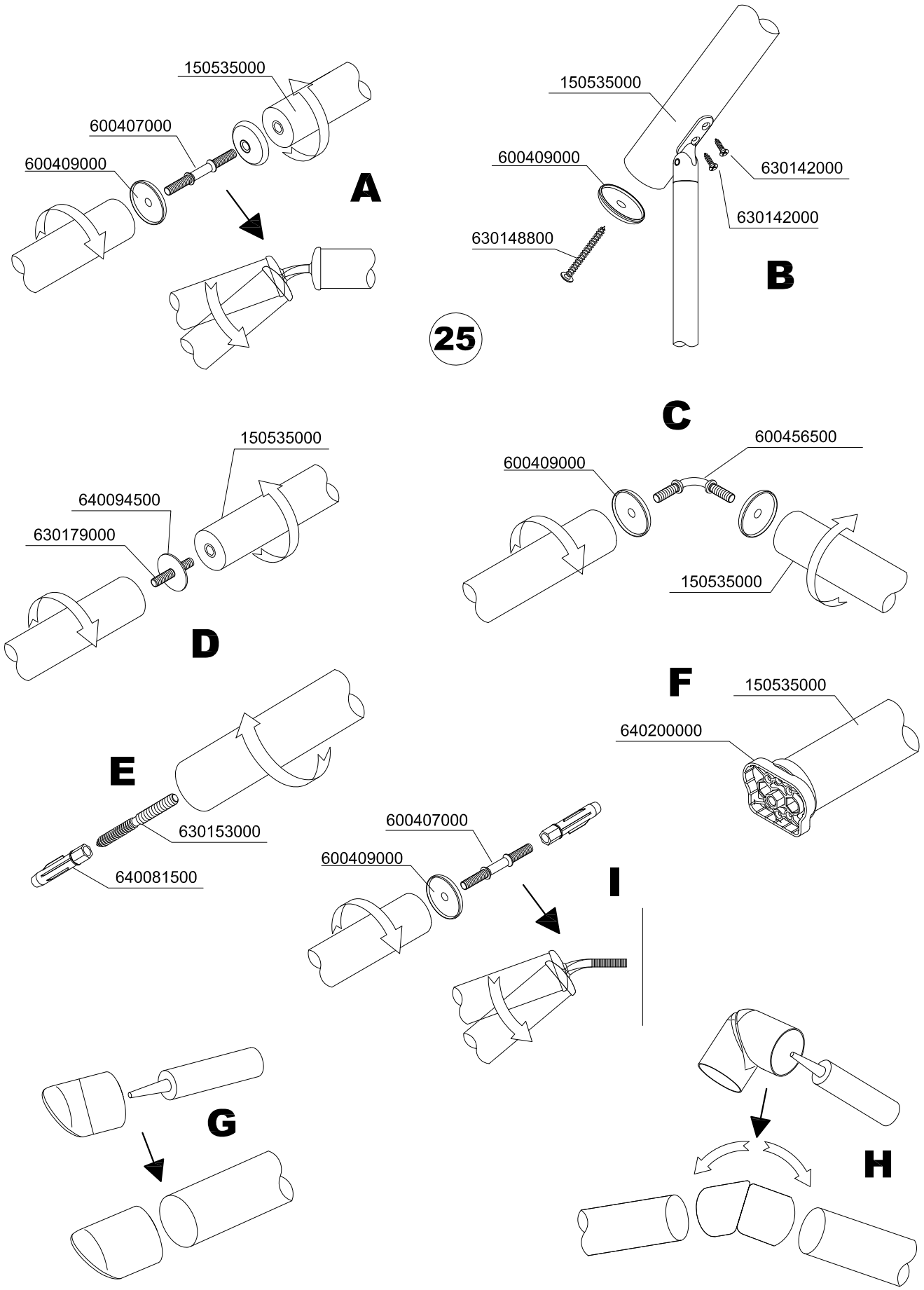
150535000
600407000
600409000
A
150535000
600409000
630142000
630142000
630148800
B
25
C
150535000
640094500
630179000
D
600456500
600409000
150535000
F
150535000
640200000
E
630153000
640081500
600407000
600409000
I
G
H

25-2

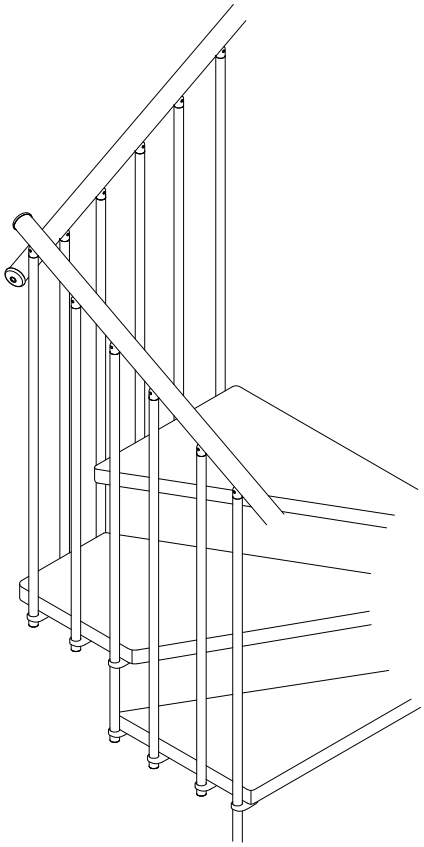

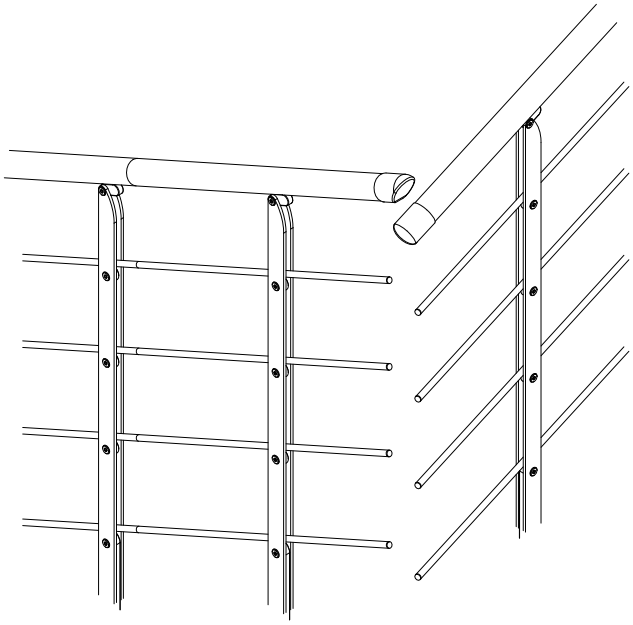

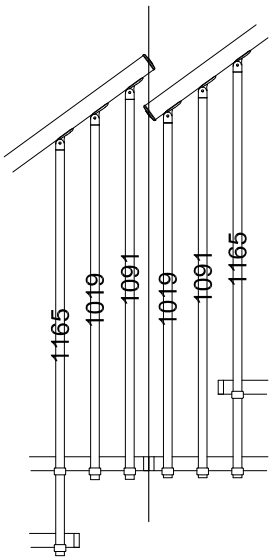

105-120-130-140

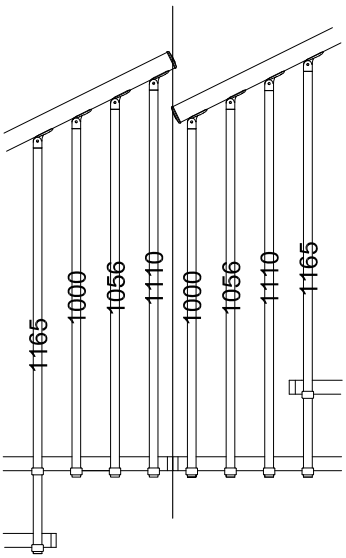

150-160-170-180

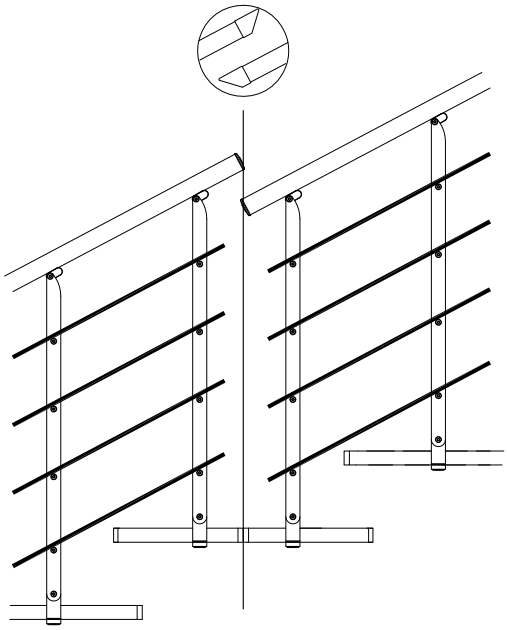

RINGHIERA COLONNE

105-120-130-140

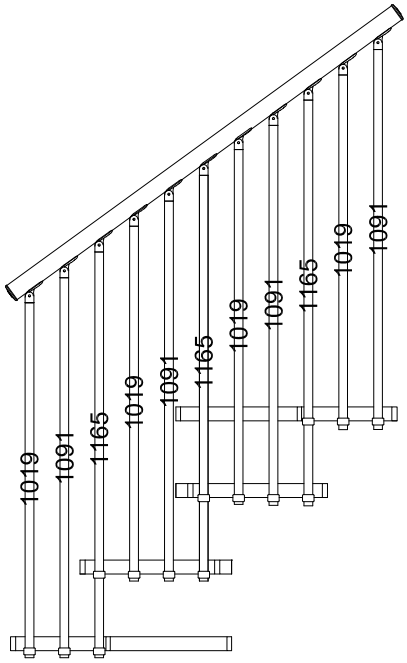

150-160-170-180

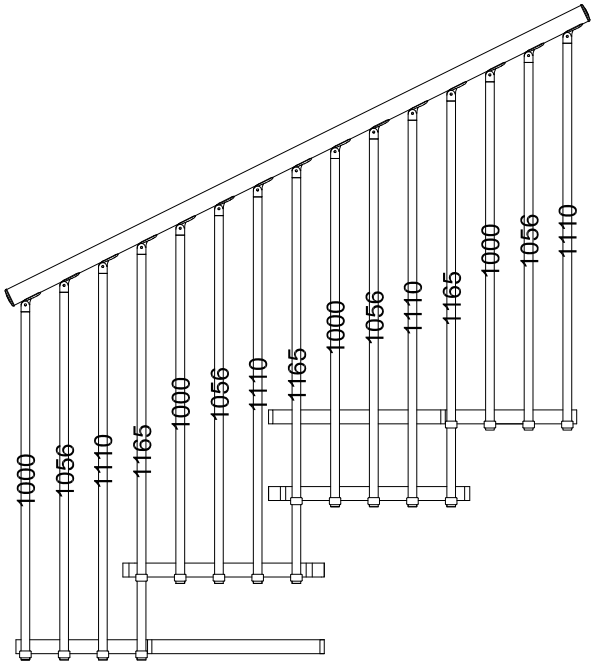

26

RINGHIERA CAVETTI PARALLELI

105-120-130-140

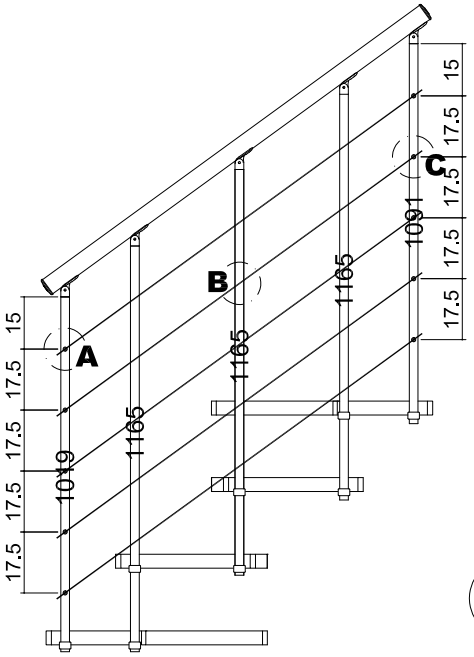

150-160-170-180

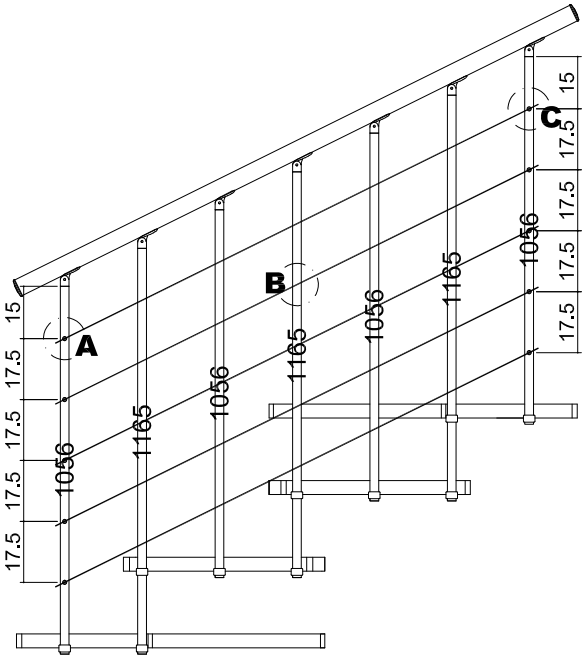

27

RINGHIERA CAVETTI INCROCIATI

105-120-130-140

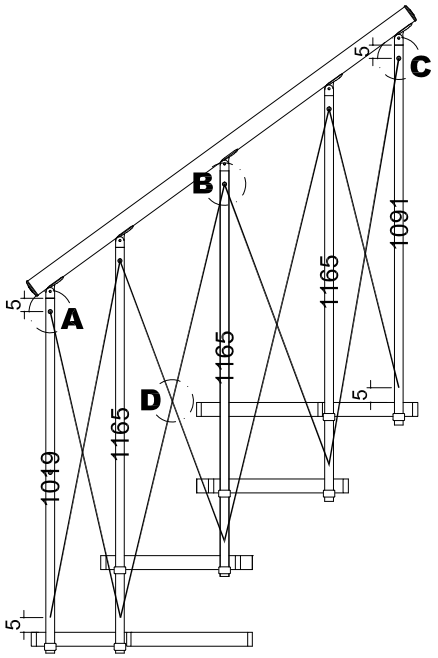

150-160-170-180

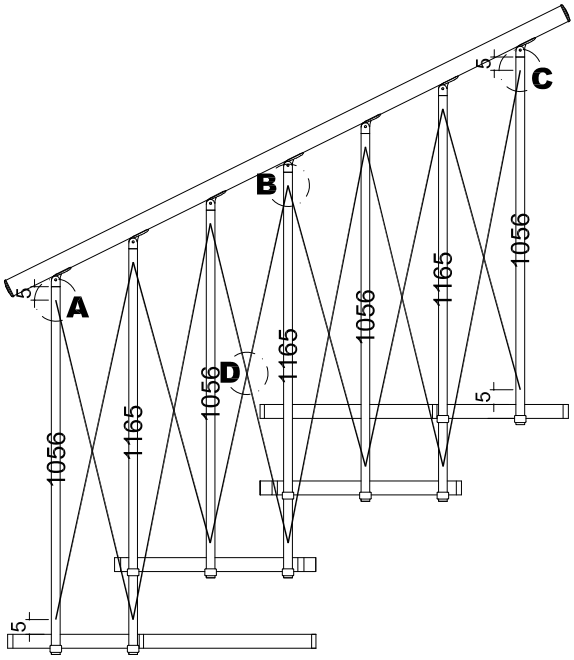

28

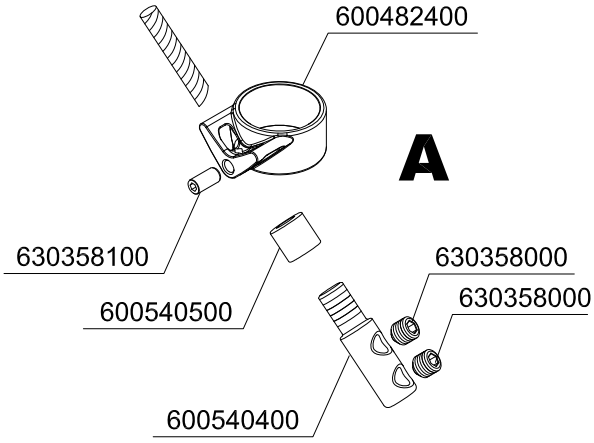

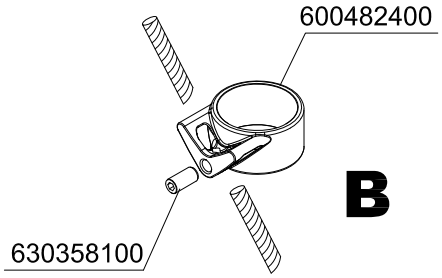

29

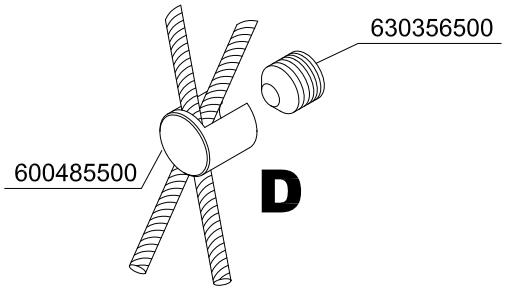

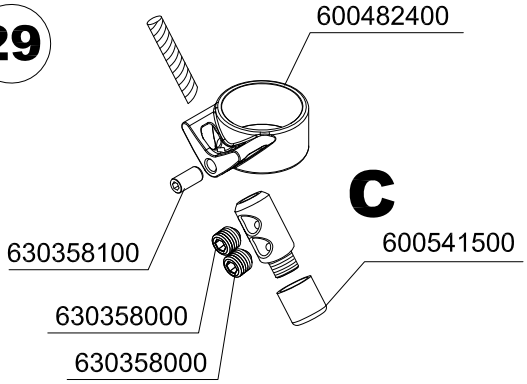

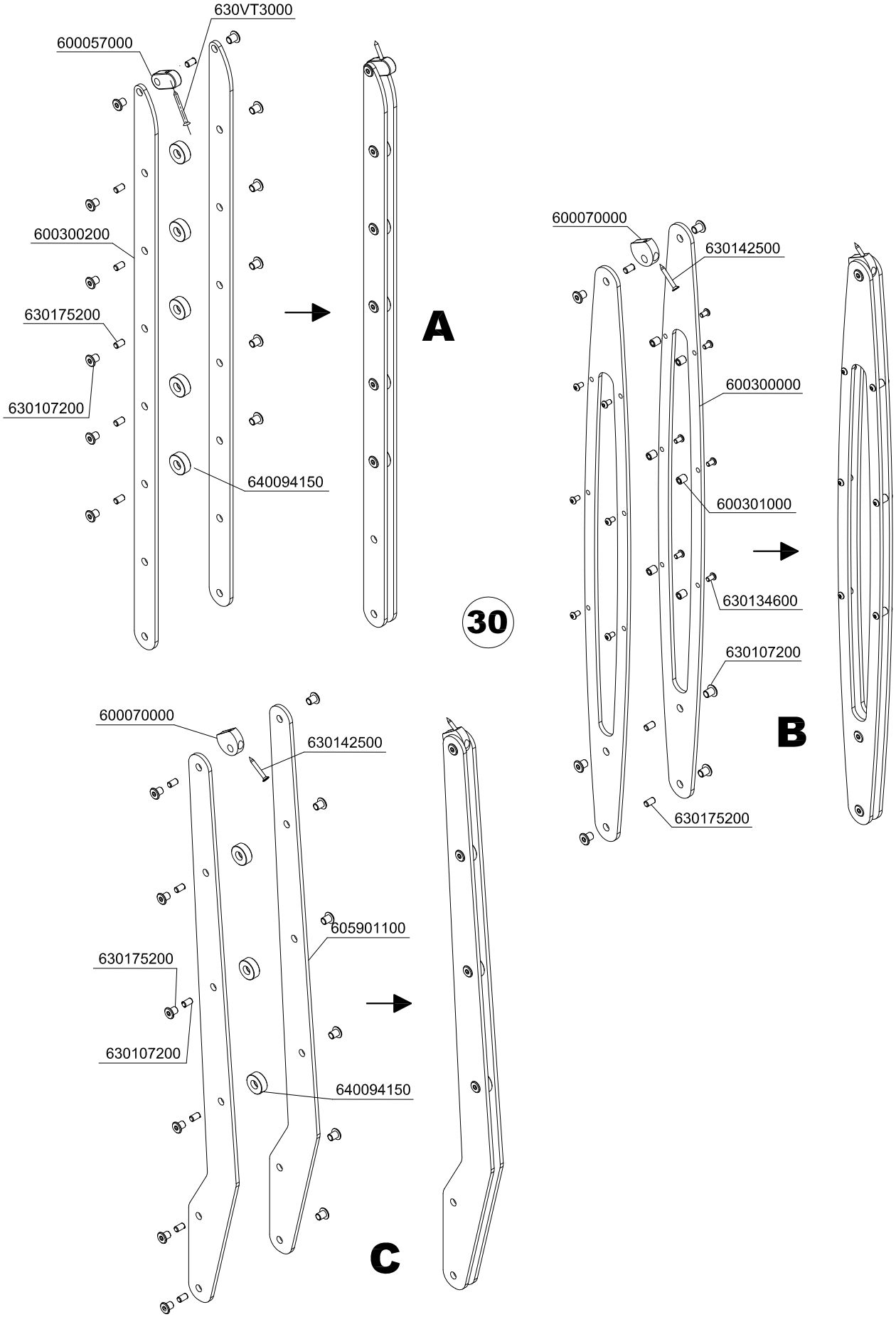
630VT3000
600057000
600300200
630175200
630107200
640094150
A
30
600070000
630142500
600300000
600301000
630134600
630107200
630175200
B
600070000
630142500
605901100
630175200
630107200
640094150
C

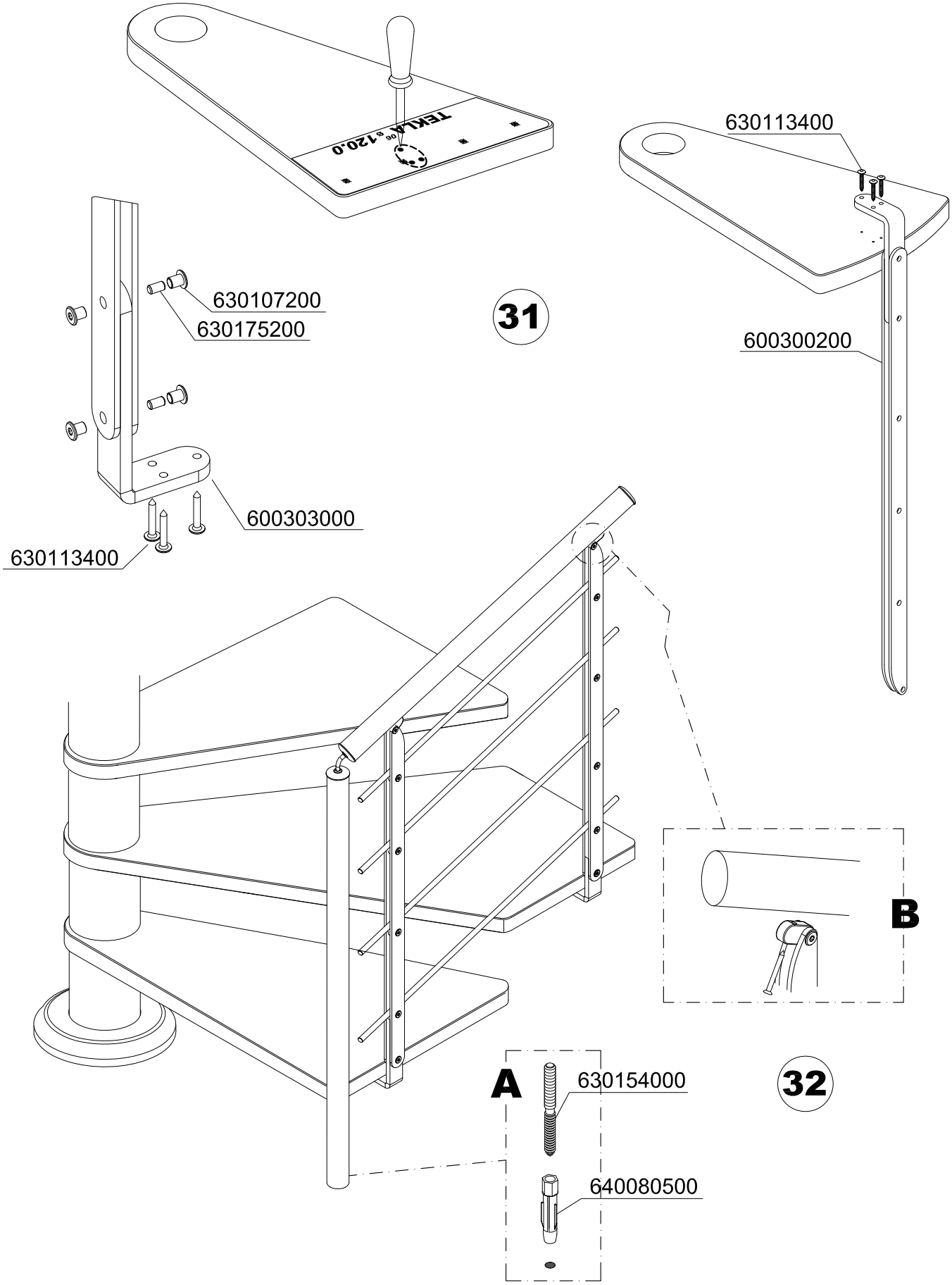

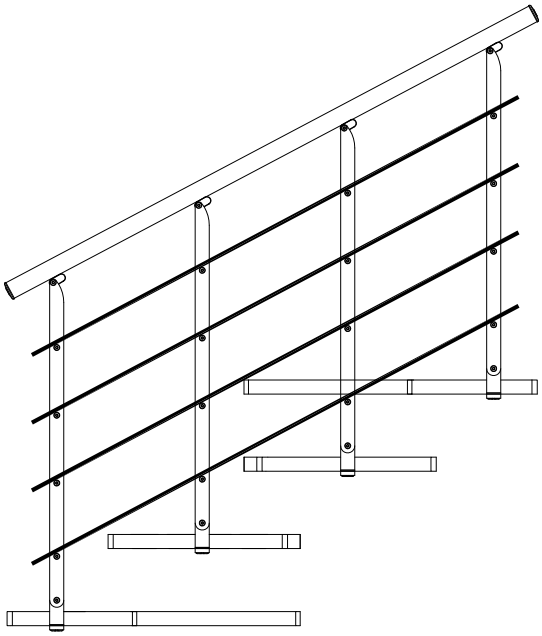

33

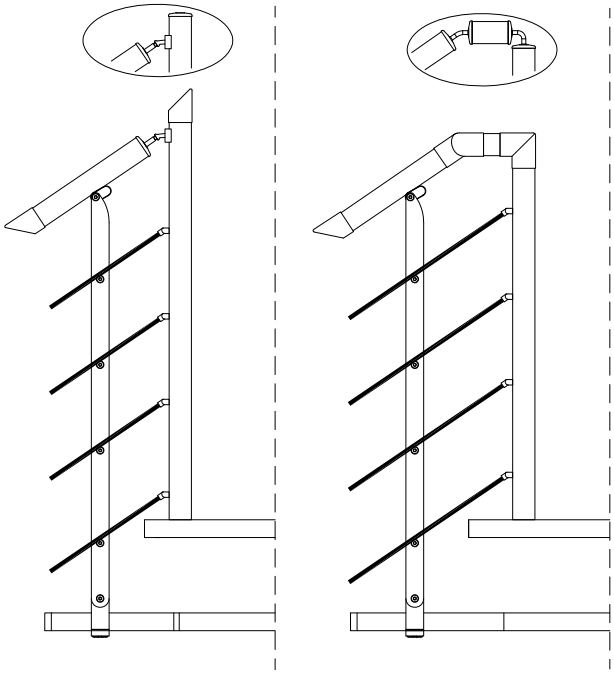

105 -140

150 -180

33 A

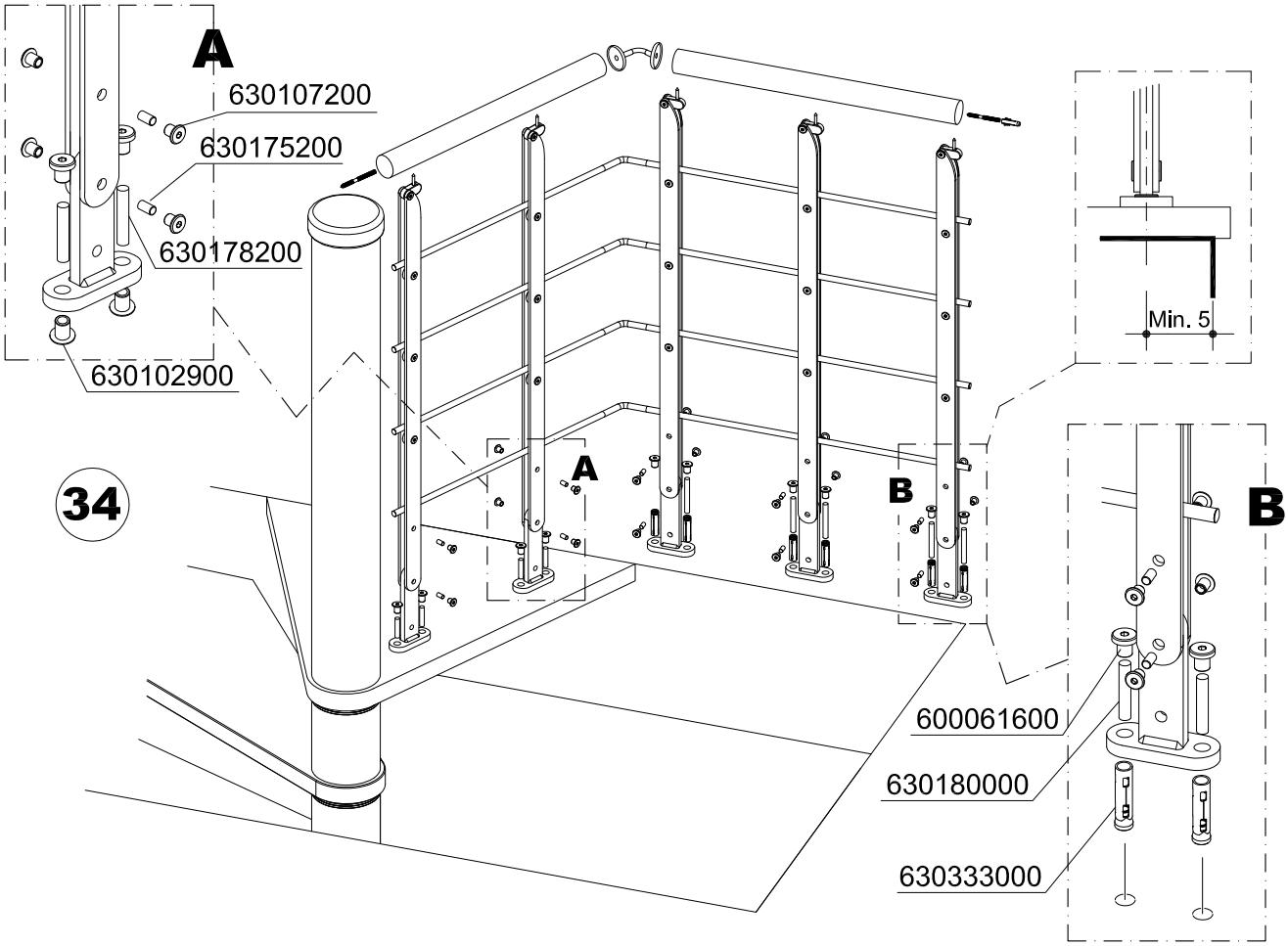

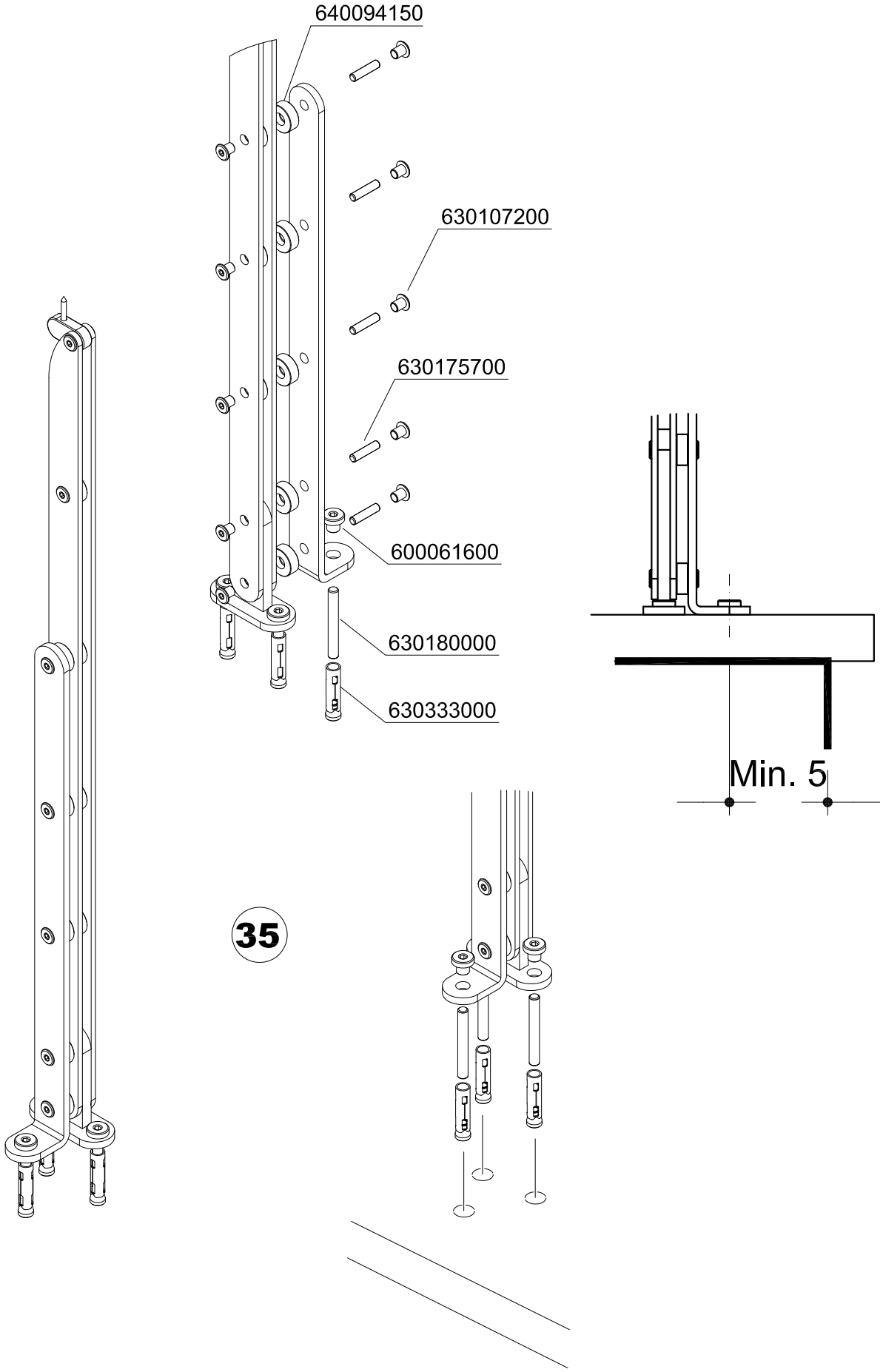
640094150
630107200
630175700
600061600
630180000
630333000
Min. 5
35

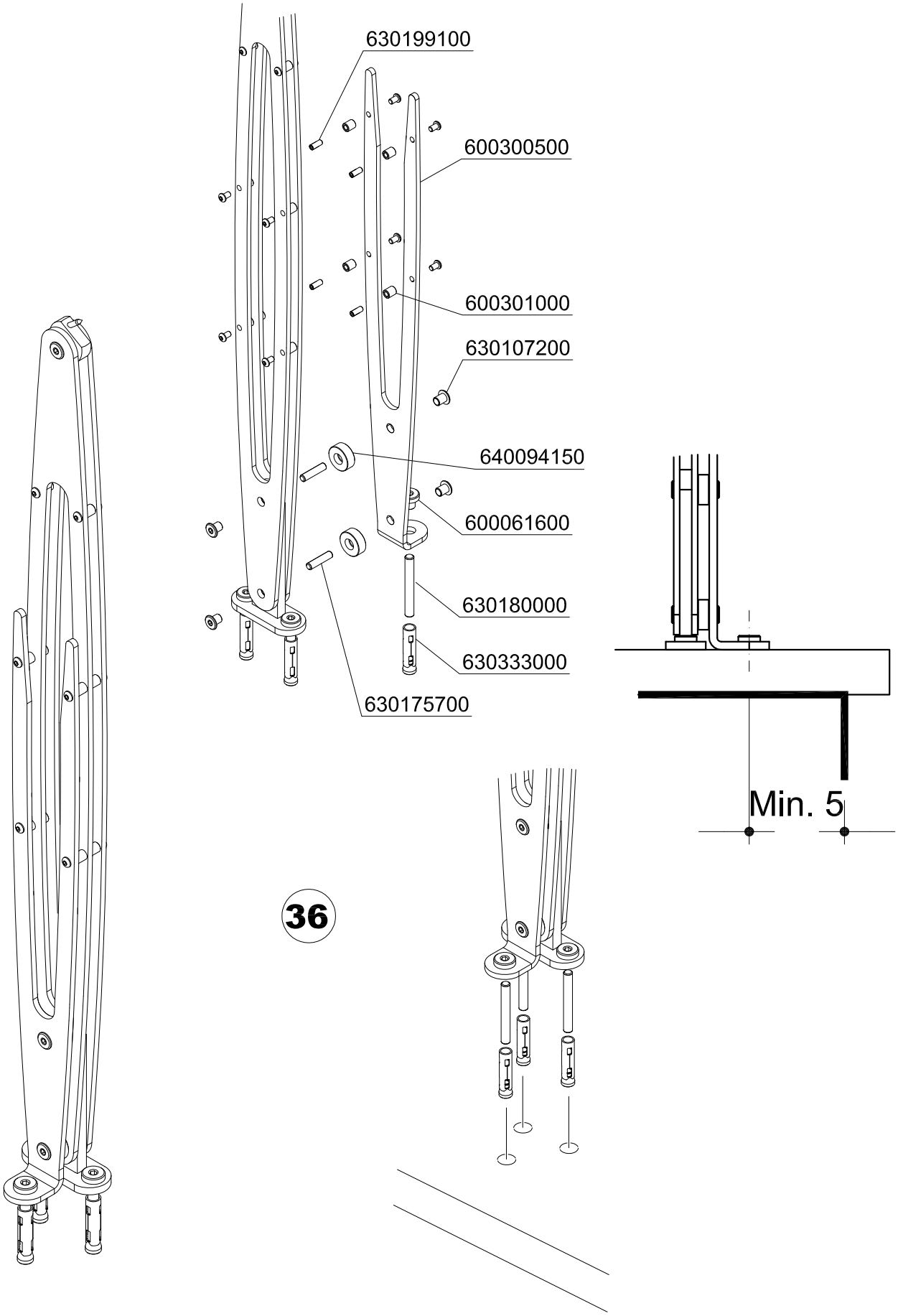
630199100
600300500
600301000
630107200
640094150
600061600
630180000
630333000
630175700
Min. 5
36